MALUHIA AUXILIARY PARKING LOT

HONOLULU, O'AHU, HAWAII

T.M.K.: 1-6-009:001

FOR THE:

STATE OF HAWAII
DEPARTMENT OF LAND AND NATURAL RESOURCES
LAND DIVISION

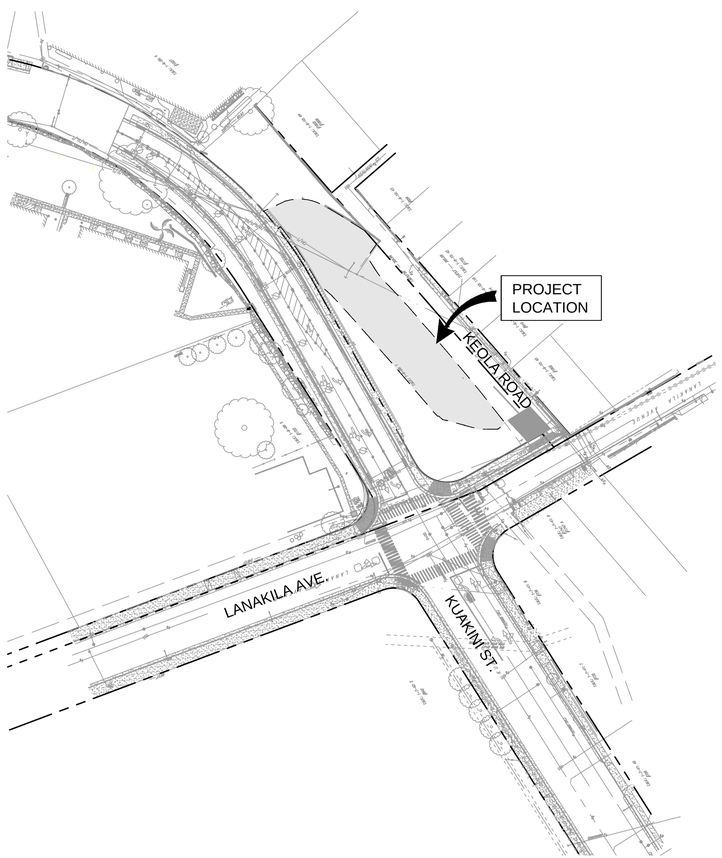

NORTH

PLOT PLAN
NOT TO SCALE

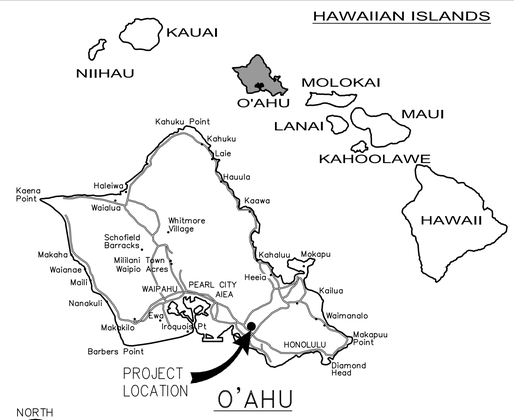

NORTH

VICINITY MAP
NOT TO SCALE

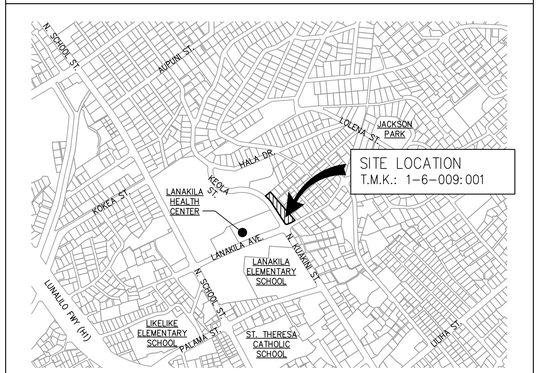

NORTH

LOCATION MAP
NOT TO SCALE

INDEX OF DRAWINGS

DWG NO.	DESCRIPTION
C001	TITLE SHEET, LOCATION MAP, VICINITY MAP, PLOT PLAN AND INDEX OF DRAWINGS
C002	NOTES – 01
C003	NOTES – 02
C004	NOTES, LEGEND AND ABBREVIATIONS
C101	EXISTING, DEMOLITION AND EROSION CONTROL PLAN
C102	SITE LAYOUT PLAN
C103	GRADING PLAN
C301	SITE SECTIONS
C501	CONSTRUCTION DETAILS
C502	CONSTRUCTION DETAILS

PROJECT TEAM

CIVIL:
BOWERS+KUBOTA CONSULTING
94–408 Akoki Street, Suite 201–A
WAIPAHU, HAWAII 96797
CONTACT: Lance Takehara
PH: (808) 836–7787
FAX: (808) 834–4833
E–MAIL: ltakehara@bowersandkubota.com

APPROVED:

DIRECTOR, PLANNING AND PERMITTING DEPT.
CITY AND COUNTY OF HONOLULU
(FOR SITE GRADING AND CONSTRUCTION WITHIN CITY R.O.W. ONLY)

DATE

BOWERS + KUBOTA CONSULTING
Project Management • Planning • Architectural/Engineering Design • Construction Management

LANCE K. TAKEHARA
LICENSED PROFESSIONAL ENGINEER
No. 14439–C
HAWAII, U.S.A.

EXPIRATION DATE 04/30/2018

THIS WORK WAS PREPARED BY ME OR UNDER MY SUPERVISION AND CONSTRUCTION OF THIS PROJECT WILL BE UNDER MY OBSERVATION. ("OBSERVATION OF CONSTRUCTION" SHALL BE DEFINED IN CHAPTER 115, HAWAII ADMINISTRATIVE RULES FOR PROFESSIONAL ENGINEERS, SURVEYORS AND LANDSCAPE ARCHITECTS STATE OF HAWAII, SUBCHAPTER 1, SECTION 16–115–2 DEFINITIONS, EFFECTIVE 8/29/94.)

MALUHIA AUXILIARY PARKING LOT
TMK: 1–6–009: 001

DATE	ISSUANCE

NO.	DATE	DESCRIPTION	APRPOVED

BUILDING	NAME			
PROJECT	TMK	1–6–009: 001		
	DESCRIPT.	MALUHIA AUXILIARY PARKING LOT		
	NUMBER	12A6506.00		
DRAWING	DRAWN BY	SD/ET	CHECKED BY	LT
	DATE	APRIL 17, 2017		
	TITLE	TITLE SHEET, LOCATION MAP, VICINITY MAP		
		PLOT PLAN AND INDEX OF DRAWINGS		
	NUMBER	C	0	01
		TYPE	SERIES	SEQUENCE

BOWERS + KUBOTA CONSULTING
• Project Management • Planning • Architectural/Engineering Design • Construction Mangement

CONSTRUCTION NOTES:

1. NO WORK SHALL PROCEED WITHOUT THE APPROVAL OF THE CONTRACTING OFFICER. ALL PHASES OF ON-SITE WORK SHALL BE COORDINATED WITH THE USER AND THE CONTRACTING OFFICER SO AS TO MINIMIZE ANY CONFLICTS ON-SITE, ENSURE ADEQUATE INGRESS/EGRESS IS PROVIDED TO OCCUPIED SPACES, ENSURE PUBLIC SAFETY AT ALL TIMES, AND THAT DISRUPTION TO EXISTING ACTIVITIES IS MINIMIZED.

2. CONTRACTOR SHALL BE RESPONSIBLE TO CONFIRM ALL ON-SITE CONDITIONS AND SHALL CONFIRM VIA. TONING AND/OR FIELD VISIT TO VERIFY EXISTING UTILITES THAT MAY IMPACT THE PROJECT.

3. CONTRACTOR SHALL POST ON THE SITE, EMERGENCY TELEPHONE NUMBERS FOR PUBLIC WORKS, AMBULANCE, POLICE, AND FIRE DEPARTMENTS.

4. CONTRACTOR SHALL NOTIFY ALL PUBLIC OR PRIVATE UTILITY OWNERS 48 HOURS PRIOR TO COMMENCEMENT OF WORK ADJACENT TO THE UTILITY UNLESS AN EXCAVATION PERMIT SPECIFIES OTHERWISE.

5. UTILITIES AND UNDERGROUND FACILITIES INDICATED ARE FOR INFORMATION ONLY. IT IS THE CONTRACTOR'S RESPONSIBILITY TO VERIFY THE LOCATION AND DEPTH WITH THE APPROPRIATE AGENCIES. NEITHER THE OWNER NOR THE CITY NOR THE DESIGN PROFESSIONAL ASSUMES RESPONSIBILITY THAT THE UTILITIES AND UNDERGROUND FACILITIES INDICATED WILL BE THE UTILITIES AND UNDERGROUND FACILITIES ENCOUNTERED.

6. CONTRACTOR TO CONTACT THE HAWAII ONE CALL CENTER AT 1-800-423-7287 FORTY-EIGHT (48) HOURS PRIOR TO BEGINNING WORK TO HAVE THE LOCATION OF EXISTING UNDERGROUND UTILITIES MARKED. THE CONTRACTOR SHALL NOTIFY ALL AGENCIES TO VERIFY THE ACTUAL LOCATION OF ALL UTILITIES IN THE PROJECT AREA PRIOR TO CONSTRUCTION. IT SHALL BE THE RESPONSIBILITY OF THE CONTRACTOR TO IDENTIFY, LOCATE, AND PROTECT ALL UNDERGROUND FACILITIES AND TO COORDINATE ALL WORK.

7. THE CONTRACTOR SHALL HIRE A STREET CLEANING CONTRACTOR TO CLEAN UP DIRT AND DEBRIS FROM ADJACENT STREETS THAT ARE ATTRIBUTABLE TO THE PROJECT'S CONSTRUCTION ACTIVITIES.

8. ALL GRADING SHALL BE PERFORMED IN SUCH A MANNER AS TO COMPLY WITH THE STANDARDS ESTABLISHED BY THE AIR QUALITY MAINTENANCE DISTRICT FOR AIRBORNE PARTICULATES (DUST).

9. ALL GRADING SHALL CONFORM TO APPROVED SPECIFICATIONS PRESENTED HEREON OR ATTACHED HERETO. ALL GRADING WORK SHALL BE OBSERVED AND APPROVED BY THE SOILS ENGINEER. THE SOILS ENGINEER SHALL BE NOTIFIED AT LEAST 48 HOURS BEFORE BEGINNING ANY GRADING. UNOBSERVED AND UNAPPROVED GRADING WORK SHALL BE REMOVED AND REDONE AT THE CONTRACTORS EXPENSE.

10. ALL MATERIALS, REQUIRED FOR THE COMPLETE EXECUTION OF THE PROJECT, SHALL BE FURNISHED AND INSTALLED BY THE CONTRACTOR UNLESS OTHERWISE NOTED. THE CONTRACTOR SHALL BE RESPONSIBLE FOR OBTAINING ALL ENCROACHMENT, EXCAVATION, CONCRETE, PLUMBING, TRENCHING, ETC. PERMITS NECESSARY PRIOR TO BEGINNING CONSTRUCTION OF ANY WORK.

11. THE CONTRACTOR SHALL PROVIDE ALL LIGHTS, SIGNS, BARRICADES, FLAGMEN OR OTHER DEVICES NECESSARY TO PROVIDE FOR PUBLIC SAFETY DURING THE CONSTRUCTION PERIOD.

12. THE CONTRACTOR SHALL BE RESPONSIBLE TO REPAIR OR REPLACE EXISTING PAVEMENT, UTILITY LINES, AND OTHER IMPROVEMENTS DAMAGED OR UNDERMINED DURING THE CONSTRUCTION PERIOD AT HIS OWN EXPENSE TO MATCH EXISTING CONDITIONS.

13. THE CONTRACTOR SHALL BE RESPONSIBLE FOR OBTAINING ALL ENCROACHMENT, EXCAVATION, CONCRETE, ELECTRICAL, PLUMBING, ETC. PERMITS NECESSARY PRIOR TO BEGINNING CONSTRUCTION FOR ANY WORK.

14. THE CONTRACTOR SHALL HAVE A SUPERINTENDENT OR REPRESENTATIVE ON SITE AT ALL TIMES DURING CONSTRUCTION.

15. CONTRACTOR SHALL EXPOSE LOCATION WHERE PROPOSED UTILITIES CROSS EXISTING UTILITIES PRIOR TO TRENCH EXCAVATION.

16. WHEN TRENCH EXCAVATION IS ADJACENT TO OR UNDER EXISTING STRUCTURES OR FACILITIES, THE CONTRACTOR SHALL BE RESPONSIBLE FOR PROPERLY SHEETING AND BRACING THE EXCAVATION AND STABILIZING THE EXISTING GROUND TO RENDER IT SAFE AND SECURE FROM POSSIBLE SLIDES, CAVE-INS AND SETTLEMENT, AND FOR PROPERLY SUPPORTING EXISTING STRUCTURES AND FACILITIES WITH BERMS, STRUTS OR UNDERPINNING TO FULLY PROTECT THE EXISTING STRUCTURES FROM DAMAGE.

17. ALL ABANDONED PIPE OPENINGS SHALL BE PLUGGED WITH CLASS "C" CONCRETE TO A DEPTH OF ONE AND ONE-HALF TIMES THE DIAMETER OF THE PIPE.

18. THE CONTRACTOR'S HAUL ROUTES SHALL BE LIMITED TO THE ROADWAYS DESIGNATED ON THE HAUL ROUTE PLAN UNLESS OTHERWISE AUTHORIZED BY THE CONTRACTING OFFICER.

19. STORAGE OF CONSTRUCTION MATERIAL AND EQUIPMENT ON CITY STREETS WILL NOT BE PERMITTED.

20. CONSTRUCTION EQUIPMENT SHALL BE PROPERLY MUFFLED. UNNECESSARY IDLING OF GRADING CONSTRUCTION EQUIPMENT IS PROHIBITED.

CONSTRUCTION NOTES Cont.:

21. CONSTRUCTION EQUIPMENT, TOOLS, ETC. SHALL NOT BE CLEANED OR RINSED INTO A STREET, GUTTER OR STORM DRAIN.

22. A CONTAINED AND COVERED AREA ON-SITE SHALL BE USED FOR STORAGE OF CEMENT BAGS, PAINTS, FLAMMABLE, OILS, FERTILIZERS, PESTICIDES, OR ANY OTHER MATERIALS THAT HAVE POTENTIAL FOR BEING DISCHARGED TO THE STORM DRAIN SYSTEM BY WIND OR IN THE EVENT OF A MATERIAL SPILL.

23. ALL CONSTRUCTION DEBRIS SHALL BE GATHERED ON A REGULAR BASIS AND PLACED IN A DUMPSTER WHICH IS EMPTIED OR REMOVED WEEKLY. WHEN FEASIBLE, TARPS SHALL BE USED ON THE GROUND TO COLLECT FALLEN DEBRIS OR SPLATTERS THAT COULD CONTRIBUTE TO STORMWATER POLLUTION.

24. ANY TEMPORARY ON-SITE CONSTRUCTION PILES SHALL BE SECURELY COVERED WITH A TARP OR OTHER DEVICE TO CONTAIN DEBRIS.

25. CONCRETE TRUCKS AND CONCRETE FINISHING OPERATIONS SHALL NOT DISCHARGE WASH WATER INTO THE STREET GUTTERS OR DRAINS.

26. THE CONTRACTOR SHALL BE RESPONSIBLE FOR CONFORMANCE WITH THE APPLICABLE PROVISIONS OF THE WATER QUALITY AND WATER POLLUTION CONTROL STANDARDS CONTAINED IN HAWAII ADMINISTRATIVE RULES, TITLE 11, CHAPTER 54, "WATER QUALITY STANDARDS", AND TITLE 11, CHAPTER 55, "WATER POLLUTION CONTROL", AS WELL AS CHAPTER 14 OF THE REVISED ORDINANCES OF HONOLULU, AS AMENDED. BEST MANAGEMENT PRACTICES SHALL BE EMPLOYED AT ALL TIMES DURING CONSTRUCTION.

27. PURSUANT TO CHAPTER 6E, HRS, IN THE EVENT ANY ARTIFACTS OR HUMAN REMAINS ARE UNCOVERED DURING CONSTRUCTION OPERATIONS, THE CONTRACTOR SHALL IMMEDIATELY SUSPEND WORK AND NOTIFY THE HONOLULU POLICE DEPARTMENT AND THE STATE DEPARTMENT OF LAND AND NATURAL RESOURCES-HISTORIC PRESERVATION DIVISION (692-8015). IN ADDITION, FOR NON-CITY PROJECTS, THE CONTRACTOR SHALL INFORM THE CIVIL ENGINEERING BRANCH, DEPARTMENT OF PLANNING AND PERMITTING (768-8084); AND FOR CITY PROJECTS, NOTIFY THE RESPONSIBLE CITY AGENCY.

28. ALL APPLICABLE CONSTRUCTION WORK SHALL BE DONE IN ACCORDANCE WITH THE STANDARD SPECIFICATIONS FOR PUBLIC WORKS CONSTRUCTION, SEPTEMBER 1986 AND STANDARD DETAILS FOR PUBLIC WORKS CONSTRUCTION, SEPTEMBER 1984, AS AMENDED, OF THE DEPARTMENT OF PUBLIC WORKS, CITY AND COUNTY OF HONOLULU AND THE COUNTIES OF KAUAI, MAUI, AND HAWAII.

29. THE UNDERGROUND PIPES, CABLES OR DUCTLINES KNOWN TO EXIST BY THE ENGINEER FROM HIS SEARCH OF RECORDS ARE INDICATED ON THE PLANS. THE CONTRACTOR SHALL VERIFY THE LOCATIONS AND DEPTHS OF THE FACILITIES AND EXERCISE PROPER CARE IN EXCAVATING IN THE AREA. WHEREVER CONNECTIONS OF NEW UTILITIES TO EXISTING UTILITIES ARE SHOWN ON THE PLANS, THE CONTRACTOR SHALL EXPOSE THE EXISTING LINES AT THE PROPOSED CONNECTIONS TO VERIFY THEIR LOCATIONS AND DEPTHS PRIOR TO EXCAVATION FOR THE NEW LINES.

30. NO CONTRACTOR SHALL PERFORM ANY CONSTRUCTION OPERATION SO AS TO CAUSE FALLING ROCKS, SOIL OR DEBRIS IN ANY FORM TO FALL, SLIDE OR FLOW INTO EXISTING CITY DRAINAGE SYSTEMS, OR ADJOINING PROPERTIES, STREETS OR NATURAL WATERCOURSES. SHOULD SUCH VIOLATIONS OCCUR, THE CONTRACTOR MAY BE CITED AND THE CONTRACTOR SHALL IMMEDIATELY MAKE ALL REMEDIAL ACTIONS NECESSARY.

31. THE GENERAL CONTRACTOR/DEVELOPER/OWNER OF THE PROJECT SHALL BE RESPONSIBLE FOR CONFORMANCE WITH APPLICABLE PROVISIONS OF THE HAWAII ADMINISTRATIVE RULES, TITLE 11, CHAPTER 54, "WATER QUALITY STANDARDS," AND TITLE 11, CHAPTER 55, "WATER POLLUTION CONTROL", AS WELL AS CHAPTER 14 OF THE REVISED ORDINANCES OF HONOLULU, AS AMENDED. BEST MANAGEMENT PRACTICES SHALL BE EMPLOYED AT ALL TIMES DURING CONSTRUCTION. THE GENERAL CONTRACTOR/DEVELOPER/OWNER OF THE PROJECT SHALL OBTAIN NATIONAL POLLUTANT DISCHARGE ELIMINATION SYSTEM (NPDES) PERMIT COVERAGE(S) FOR THE FOLLOWING: 1. STORM WATER DISCHARGES ASSOCIATED WITH CONSTRUCTION ACTIVITIES THAT DISTURB ONE (1) ACRE OR MORE, AND 2. DISCHARGES OF HYDROTESTING EFFLUENT, DEWATERING EFFLUENT, AND WELL DRILLING EFFLUENT TO STATE WATERS. IN ACCORDANCE WITH STATE LAW, ALL DISCHARGES RELATED TO PROJECT CONSTRUCTION OR OPERATIONS ARE REQUIRED TO COMPLY WITH STATE WATER QUALITY STANDARDS (HAWAII ADMINISTRATIVE RULES, CHAPTER 11-54). BEST MANAGEMENT PRACTICES SHALL BE USED TO MINIMIZE OR PREVENT THE DISCHARGE OF SEDIMENT, DEBRIS, AND OTHER POLLUTANTS TO STATE WATERS. PERMIT COVERAGE IS AVAILABLE FROM THE DEPARTMENT OF HEALTH, CLEAN WATER BRANCH AT HTTP://HEALTH.HAWAII.GOV/CWB. THE OWNER/DEVELOPER/CONTRACTOR IS RESPONSIBLE FOR OBTAINING OTHER FEDERAL, STATE, OR LOCAL AUTHORIZATIONS AS REQUIRED BY LAW.

32. FOR NON-CITY PROJECTS, THE CONTRACTOR SHALL NOTIFY THE CIVIL ENGINEERING BRANCH, D.P.P. AT 768-8084 TO ARRANGE FOR INSPECTIONAL SERVICES AND SUBMIT TWO (2) SETS OF APPROVED CONSTRUCTION PLANS SEVEN (7) DAYS PRIOR TO COMMENCEMENT OF CONSTRUCTION WORK. FOR CITY PROJECTS, THE CONTRACTOR SHALL COORDINATE INSPECTIONAL SERVICES WITH THE RESPONSIBLE CITY AGENCY.

CONSTRUCTION NOTES Cont.:

33. FOR NON-CITY PROJECTS, THE CONTRACTOR MAY SUBMIT A SUBSTITUTION REQUEST TO PRECAST ANY CITY OWNED 2 AND/OR MAINTAINED DRAINAGE STRUCTURE (EX., CATCH BASINS, DRAIN MANHOLES, DRAIN INLETS, CULVERTS, ETC). HOWEVER, PRIOR TO CONSTRUCTION AND INSTALLATION OF ANY PRECAST STRUCTURE, THE CONTRACTOR SHALL A) SUBMIT SIX (6) SETS OF SHOP DRAWINGS TO THE CIVIL ENGINEERING BRANCH, DEPARTMENT OF PLANNING AND PERMITTING AND OBTAIN WRITTEN APPROVAL AND B) NOTIFY THE CIVIL ENGINEERING BRANCH, DEPARTMENT OF PLANNING AND PERMITTING AT 768-8084 TO ARRANGE FOR INSPECTIONAL SERVICES. NON-COMPLIANCE WITH ANY OF THESE REQUIREMENTS SHALL MEAN IMMEDIATE SUSPENSION OF ALL PRECAST CONSTRUCTION WORK AND REJECTION OF ALL PRECAST STRUCTURES ALREADY CONSTRUCTED. FOR CITY PROJECTS, THE CONTRACTOR SHALL SUBMIT SHOP DRAWINGS TO THE RESPONSIBLE CITY AGENCY FOR REVIEW AND APPROVAL. ALSO, THE CONTRACTOR SHALL COORDINATE INSPECTIONAL SERVICES WITH THE RESPONSIBLE CITY AGENCY.

34. CONFINED SPACE FOR ENTRY BY CITY PERSONNEL, INCLUDING INSPECTORS, INTO A PERMIT REQUIRED CONFINED SPACE AS DEFINED IN 29 CFR PART 1910.146(B), THE CONTRACTOR SHALL BE RESPONSIBLE FOR PROVIDING: I. ALL SAFETY EQUIPMENT REQUIRED BY THE CONFINED SPACE REGULATIONS APPLICABLE TO ALL PARTIES OTHER THAN THE CONSTRUCTION INDUSTRY, TO INCLUDE, BUT NOT LIMITED TO, THE FOLLOWING:
    A. FULL BODY HARNESSES FOR UP TO TWO PERSONNEL.
    B. LIFELINE AND ASSOCIATED CLIPS.
    C. INGRESS/EGRESS AND FALL PROTECTION EQUIPMENT.
    D. TWO-WAY RADIOS (WALKIE-TALKIES) IF OUT OF LINE-OF-SIGHT.
    E. EMERGENCY (ESCAPE) RESPIRATOR (10 MINUTE DURATION).
    F. CELLULAR TELEPHONE TO CALL FOR EMERGENCY ASSISTANCE.
    G. CONTINUOUS GAS DETECTOR (CALIBRATED) TO MEASURE OXYGEN, HYDROGEN SULFIDE, CARBON MONOXIDE AND FLAMMABLES (CAPABLE OF MONITORING AT A DISTANCE AT LEAST 20-FEET AWAY).
    H. PERSONAL MULTI-GAS DETECTOR TO BE CARRIED BY INSPECTOR.
    II. CONTINUOUS FORCED AIR VENTILATION ADEQUATE TO PROVIDE SAFE ENTRY CONDITIONS.
    III. ONE ATTENDANT/RESCUE PERSONNEL TOPSIDE (TWO, IF CONDITIONS WARRANT IT).

35. FOR PROJECTS ABUTTING STATE HIGHWAYS' RIGHTS-OF WAY, THE OWNER OR HIS AUTHORIZED REPRESENTATIVE SHALL NOTIFY THE STATE DEPARTMENT OF TRANSPORTATION, HIGHWAYS DIVISION, OAHU DISTRICT, DRAINAGE DISCHARGE UNIT AT 831- 6793 FOR AN ASSESSMENT OF STATE HIGHWAYS PERMIT REQUIREMENTS.

36. FOR BENCH MARK, SEE SHEET C102 .

GRADING NOTES:

1. ALL GRADING WORK SHALL BE DONE IN ACCORDANCE WITH CHAPTER 14, ARTICLES 13, 14, 15 AND 16, AS RELATED TO GRADING, SOIL EROSION AND SEDIMENT CONTROL OF THE REVISED ORDINANCES OF HONOLULU, 1990, AS AMENDED

2. NO CONTRACTOR SHALL PERFORM ANY GRADING OPERATION SO AS TO CAUSE FALLING ROCKS, SOIL OR DEBRIS IN ANY FORM TO FALL, SLIDE OR FLOW ONTO ADJOINING PROPERTIES, STREETS OR NATURAL WATERCOURSES. SHOULD SUCH VIOLATIONS OCCUR, THE CONTRACTOR MAY BE CITED AND THE CONTRACTOR SHALL IMMEDIATELY MAKE ALL REMEDIAL ACTIONS NECESSARY.

3. THE CONTRACTOR, AT HIS OWN EXPENSE, SHALL KEEP THE PROJECT AREA AND SURROUNDING AREA FREE FROM DUST NUISANCE. THE WORK SHALL BE IN CONFORMANCE WITH THE AIR POLLUTION CONTROL STANDARDS CONTAINED IN THE HAWAII ADMINISTRATIVE RULES, TITLE 11, CHAPTER 60.1, "AIR POLLUTION CONTROL".

4. THE UNDERGROUND PIPES, CABLES OR DUCTLINES KNOWN TO EXIST BY THE ENGINEER FROM HIS SEARCH OF RECORDS ARE INDICATED ON THE PLANS. THE CONTRACTOR SHALL VERIFY THE LOCATIONS AND DEPTHS OF THE FACILITIES AND EXERCISE PROPER CARE IN EXCAVATING IN THE AREA. WHEREVER CONNECTIONS OF NEW UTILITIES ARE SHOWN ON THE PLANS, THE CONTRACTOR SHALL EXPOSE THE EXISTING LINES AT THE PROPOSED CONNECTIONS TO VERIFY THEIR LOCATIONS AND DEPTHS PRIOR TO EXCAVATION FOR THE NEW LINES.

5. ADEQUATE PROVISIONS SHALL BE MADE TO PREVENT SURFACE WATERS FROM DAMAGING THE CUT FACE OF AN EXCAVATION OR THE SLOPED SURFACES OF A FILL. FURTHERMORE, ADEQUATE PROVISIONS SHALL BE MADE TO PREVENT SEDIMENT-LADEN RUNOFF FROM LEAVING THE SITE.

6. ALL SLOPES AND EXPOSED AREAS (EXCEPT SOFTBALL INFIELD AREA) SHALL BE SODDED OR PLANTED PER SHEET L-1 AS SOON AS FINAL GRADES HAVE BEEN ESTABLISHED. PLANTING SHALL NOT BE DELAYED UNTIL ALL GRADING WORK HAS BEEN COMPLETED. GRADING TO FINAL GRADE SHALL BE CONTINUOUS, AND ANY AREA WITHIN WHICH WORK HAS BEEN INTERRUPTED OR DELAYED SHALL BE PLANTED.

GRADING NOTES Cont.:

7. FILLS ON SLOPES STEEPER THAN 5:1 SHALL BE KEYED.

8. THE CITY SHALL BE INFORMED OF THE LOCATION OF THE BORROW/DISPOSAL SITE FOR THE PROJECT WHEN THE APPLICATION FOR A GRADING PERMIT IS MADE. THE BORROW/DISPOSAL SITE MUST ALSO FULFILL THE REQUIREMENTS OF THE GRADING ORDINANCE.

9. NO GRADING WORK SHALL BE DONE ON SATURDAYS, SUNDAYS AND HOLIDAYS AT ANY TIME WITHOUT PRIOR NOTICE TO THE CONTRACTING OFFICER AND DIRECTOR, D.P.P., PROVIDED SUCH GRADING WORK IS ALSO IN CONFORMANCE WITH THE COMMUNITY NOISE CONTROL STANDARDS CONTAINED IN THE HAWAII ADMINISTRATIVE RULES, TITLE 11, CHAPTER 46, "COMMUNITY NOISE CONTROL".

10. THE LIMITS OF THE AREA TO BE GRADED SHALL BE FLAGGED BEFORE THE COMMENCEMENT OF THE GRADING WORK.

11. ALL GRADING OPERATIONS SHALL BE PERFORMED IN CONFORMANCE WITH THE APPLICABLE PROVISIONS OF THE WATER QUALITY AND WATER POLLUTION CONTROL STANDARDS CONTAINED IN HAWAII ADMINISTRATIVE RULES, TITLE 11, CHAPTER 54, "WATER QUALITY STANDARDS", AND TITLE 11, CHAPTER 55, "WATER POLLUTION CONTROL", AND IF APPLICABLE, THE NPDES PERMIT FOR THE PROJECT.

12. WHERE APPLICABLE AND FEASIBLE THE MEASURES TO CONTROL EROSION AND OTHER POLLUTANTS SHALL BE IN PLACE BEFORE ANY EARTH MOVING PHASE OF THE GRADING IS INITIATED.

13. TEMPORARY EROSION CONTROLS SHALL NOT BE REMOVED BEFORE PERMANENT EROSION CONTROLS ARE IN-PLACE AND ESTABLISHED.

14. TEMPORARY EROSION CONTROL PROCEDURES SHALL BE SUBMITTED FOR APPROVAL PRIOR TO APPLICATION FOR GRADING PERMIT.

15. IF THE GRADING WORK INVOLVES CONTAMINATED SOIL, THEN ALL GRADING WORK SHALL BE DONE IN CONFORMANCE WITH APPLICABLE STATE AND FEDERAL REQUIREMENTS.

16. BUILDING PERMIT FOR RETAINING WALLS SHALL BE OBTAINED PRIOR TO COMMENCEMENT OF GRADING WORK ON SITE.

17. FOR NON-CITY PROJECTS, THE CONTRACTOR SHALL NOTIFY THE CIVIL ENGINEERING BRANCH, D.P.P. AT 768-8084 TO ARRANGE FOR INSPECTIONAL SERVICES AND SUBMIT TWO (2) SETS OF APPROVED CONSTRUCTION PLANS SEVEN (7) DAYS PRIOR TO COMMENCEMENT OF CONSTRUCTION WORK. FOR CITY PROJECTS, THE CONTRACTOR SHALL COORDINATE INSPECTIONAL SERVICES WITH THE RESPONSIBLE CITY AGENCY.

18. PURSUANT TO CHAPTER 6E, HRS, IN THE EVENT ANY ARTIFACTS OR HUMAN REMAINS ARE UNCOVERED DURING CONSTRUCTION OPERATIONS, THE CONTRACTOR SHALL IMMEDIATELY SUSPEND WORK AND NOTIFY THE HONOLULU POLICE DEPARTMENT AND THE STATE DEPARTMENT OF LAND AND NATURAL RESOURCES-HISTORIC PRESERVATION DIVISION (692-8015). IN ADDITION, FOR NON-CITY PROJECTS, THE CONTRACTOR SHALL INFORM THE CIVIL ENGINEERING BRANCH, D.P.P. (768-8084); AND FOR CITY PROJECTS, NOTIFY THE RESPONSIBLE CITY AGENCY.

19. FOR ALL PROJECTS, WHICH WILL DISTURB ONE (1) ACRE OR MORE OF LAND, THE CONTRACTOR SHALL NOT START CONSTRUCTION UNTIL A NOTICE OF GENERAL PERMIT COVERAGE (NGPC) IS RECEIVED FROM THE DEPARTMENT OF HEALTH, STATE OF HAWAII, AND HAS SATISFIED ANY OTHER APPLICABLE REQUIREMENTS OF THE NPDES PERMIT PROGRAM. ALSO, FOR NON-CITY AND OTHER NON-GOVERNMENTAL AGENCY PROJECTS, THE CONTRACTOR SHALL PROVIDE A WRITTEN COPY OF THE NGPC TO THE PERMITTING AND INSPECTION SECTION, CIVIL ENGINEERING BRANCH, D.P.P., AT LEAST SEVEN (7) CALENDAR DAYS BEFORE THE START OF THE CONSTRUCTION. FOR CITY OR OTHER GOVERNMENTAL PROJECTS, THE CONTRACTOR SHOULD PROVIDE A WRITTEN COPY OF THE NGCP TO THE APPROPRIATE CITY DEPARTMENT OR GOVERNMENTAL AGENCY PER THEIR REQUIREMENTS.

20. ALL GRADING AND CONSTRUCTION WORK SHALL IMPLEMENT MEASURES TO ENSURE THAT THE DISCHARGE OF POLLUTANTS FROM THE CONSTRUCTION SITE WILL BE REDUCED TO THE MAXIMUM EXTENT PRACTICABLE AND WILL NOT CAUSE OR CONTRIBUTE TO AN EXCEEDANCE OF WATER QUALITY STANDARDS.

21. NON-COMPLIANCE TO ANY OF THE ABOVE REQUIREMENTS SHALL MEAN IMMEDIATE SUSPENSION OF ALL WORK, AND REMEDIAL WORK SHALL COMMENCE IMMEDIATELY. ALL COSTS INCURRED SHALL BE BILLED TO THE VIOLATOR. FURTHERMORE, VIOLATORS SHALL BE SUBJECTED TO ADMINISTRATIVE, CIVIL AND/OR CRIMINAL PENALTIES.

APPROVED BY:

CHIEF, CIVIL ENGINEERING BRANCH, DPP DATE

BOWERS + KUBOTA CONSULTING
Project Management • Planning • Architectural/Engineering Design • Construction Management

LANCE K. TAKEHARA
LICENSED PROFESSIONAL ENGINEER
No. 14439-C
HAWAII, U.S.A.
EXPIRATION DATE 04/30/2018

THIS WORK WAS PREPARED BY ME OR UNDER MY SUPERVISION AND CONSTRUCTION OF THIS PROJECT WILL BE UNDER MY OBSERVATION. ("OBSERVATION OF CONSTRUCTION" SHALL BE DEFINED IN CHAPTER 115, HAWAII ADMINISTRATIVE RULES FOR PROFESSIONAL ENGINEERS, SURVEYORS AND LANDSCAPE ARCHITECTS STATE OF HAWAII, SUBCHAPTER 1, SECTION 16-115-2 DEFINITIONS, EFFECTIVE 8/29/94.)

MALUHIA AUXILIARY PARKING LOT

TMK: 1-6-009:001

DATE	ISSUANCE

NO.	DATE	DESCRIPTION	APRPOVED

BUILDING	NAME			
PROJECT	TMK	1-6-009:001		
	DESCRIPT.	MALUHIA AUXILIARY PARKING LOT		
	NUMBER	12A6506.00		
	DRAWN BY	SD/ET	CHECKED BY	LT
	DATE	APRIL 17, 2017		
DRAWING	TITLE	**NOTES - 01**		
	NUMBER	**C**	**0**	**02**
		TYPE	SERIES	SEQUENCE

BOWERS + KUBOTA CONSULTING
• Project Management • Planning • Architectural/Engineering Design • Construction Mangement

WATER NOTES:

1. UNLESS OTHERWISE SPECIFIED, ALL MATERIALS AND CONSTRUCTION OF WATER SYSTEM FACILITIES AND APPURTENANCES SHALL BE IN ACCORDANCE WITH THE CITY AND COUNTY OF HONOLULU, BOARD OF WATER SUPPLY'S "WATER SYSTEM STANDARDS", DATED 2002, THE "WATER SYSTEM EXTERNAL CORROSION CONTROL STANDARDS", VOLUME 3, DATED 1991, AND ALL SUBSEQUENT AMENDMENTS AND ADDITIONS.

2. ALL WATER MAINS AND APPURTENANCES SHALL BE SUBJECTED TO A HYDROSTATIC TEST PRESSURE OF 150 PSI. DURING THE 30 MINUTE PRESSURE TEST, AND AFTER THE PRESSURE HAS STABILIZED, THE PRESSURE SHALL DROP NO MORE THAN 10 PSI. ALTERNATIVELY, THE SYSTEM MAY BE TESTED AT PREVAILING LINE PRESSURE, JOINTS LEFT EXPOSED FOR 24 HOURS TO CHECK FOR LEAKS PRIOR TO BACKFILL.

3. THE CONTRACTOR SHALL CHLORINATE THE ENTIRE INSIDE SURFACE OF EACH PIPE AND FITTING WITH DISINFECTION SOLUTION OF 5 OUNCES OF SODIUM HYPOCHLORITE MIXED WITH 10 GALLONS OF WATER. (FOR CONNECTION ONLY)

4. THE PROJECT SHALL BE SUBJECT TO THE BOARD OF WATER SUPPLY'S CROSS-CONNECTION CONTROL REQUIREMENTS PRIOR TO ISSUANCE OF THE BUILDING PERMIT.

5. THE CONTRACTOR SHALL BE RESPONSIBLE FOR THE PROTECTION OF ALL WATER LINES DURING CONSTRUCTION. THE CONTRACTOR SHALL BE ESPECIALLY CAREFUL WHEN EXCAVATING BEHIND WATER LINES, TEES, AND BENDS WHEREVER THERE IS A POSSIBILITY OF WATER LINE MOVEMENT DUE TO THE REMOVAL OF THE SUPPORTING EARTH BEYOND THE EXISTING REACTION BLOCKS. THE CONTRACTOR SHALL TAKE WHATEVER MEASURES NECESSARY TO PROTECT THE WATER LINES, SUCH AS CONSTRUCTING SPECIAL REACTION BLOCKS AND/OR MODIFYING HIS CONSTRUCTION METHOD.

6. THE EXISTENCE AND LOCATION OF UNDERGROUND UTILITIES AND STRUCTURES AS SHOWN ON THE PLANS ARE FROM THE LATEST AVAILABLE DATA BUT IS NOT GUARANTEED AS TO THE ACCURACY OR THE ENCOUNTERING OF OTHER OBSTACLES DURING THE COURSE OF THE WORK. THE CONTRACTOR SHALL BE RESPONSIBLE AND SHALL PAY FOR ALL DAMAGES TO EXISTING UTILITIES. THE CONTRACTOR SHALL NOT ASSUME THAT WHERE NO UTILITIES ARE SHOWN, THAT NONE EXIST.

7. THE CONTRACTOR/DEVELOPER SHALL OBTAIN AN NPDES PERMIT PRIOR TO CHLORINATION AND/OR DEWATERING. A COPY OF THE PERMIT SHALL BE SUBMITTED TO THE BOARD OF WATER SUPPLY, CAPITAL PROJECTS DIVISION, CONSTRUCTION SECTION.

8. PIPE CUSHION SHALL BE OF HIGH RESISTIVITY MATERIAL. THE CONTRACTOR SHALL SUBMIT A SOIL CERTIFICATION THAT HIGH RESISTANT CUSHION MATERIAL HAS A RESISTIVITY GREATER THAN 5,000 OHM-CM. REMAINDER OF THE BACKFILL MATERIAL SHALL BE AS SPECIFIED IN THE WATER SYSTEM STANDARDS. PIPE CUSHION AND BACKFILL MATERIAL SHALL CONTAIN NO HAZARDOUS SUBSTANCES ABOVE REGULATORY ACTION LEVELS, INCLUDING, BUT NOT LIMITED TO, LEAD, ASBESTOS, MERCURY, CHROMIUM, CADMIUM, ZINC, STRONTIUM AND POLYCHLORINATED BIPHENYLS (PCB).

9. ALL REQUIRED ELECTRICAL ISOLATION PROCEDURES AND CORROSION CONTROL REQUIREMENTS SHALL APPLY.

10. ALL DUCTILE IRON PIPE, FITTINGS AND VALVES SHALL BE WRAPPED IN TWO LAYERS OF 8 MIL. POLYETHILENE WRAP.

11. INSTALL 4 MIL. THICK, NON-METALLIC, BLUE COLORED, 6-INCHES WIDE WARNING TAPE OVER THE CENTERLINE OF THE PIPE AND BELOW THE BASE COURSE ALONG THE ENTIRE LENGTH OF THE TRENCH. TAPE SHOULD BE MARKED WITH "CAUTION WATER LINE BURIED BELOW".

12. THE INSTALLATION, CHLORINATION AND TESTING OF THE WATER MAIN AND FACILITIES AFTER THE METER SHALL NOT BE THE RESPONSIBILITY OF THE BOARD OF WATER SUPPLY.

13. THE CONTRACTOR SHALL FURNISH AND INSTALL POLYETHYLENE WRAP, 3 FEET MINIMUM AT ALL TAPS (FOR D.I. PIPE AND COPPER LATERAL COMBINATION ONLY) AND PLASTIC PIPE (P.E. TUBING) 3 FEET LONG AFTER METERS FOR ALL SERVICE LATERAL CONNECTIONS. ALL DUCTILE IRON PIPE, FITTINGS AND VALVES SHALL BE WRAPPED WITH TWO LAYERS OF 8 MIL. POLYETHYLENE WRAP.

14. THE CONTRACTOR SHALL NOTIFY BWS CAPITAL PROJECTS DIVISION, CONSTRUCTION SECTION, IN WRITING, ONE WEEK PRIOR TO COMMENCING WORK ON THE WATER SYSTEM.

15. THE PROJECT SHALL PAY THE APPLICABLE WATER FACILITIES AND/OR ONE-TIME SERVICE CHARGE AND FOR THE METER WHICH WILL BE FURNISHED BY BWS AND INSTALLED BY THE CONTRACTOR WHEN THE LATERAL IS INSTALLED.

WATER NOTES Cont.:

DISCHARGE OF CHLORINATED WATER NOTES

1. THE CONTRACTOR SHALL NOTIFY THE DIVISION OF WATER QUALITY'S SOURCE CONTROL SECTION BY TELEPHONE (527-5137), AT LEAST 48 HOURS PRIOR TO THE DISCHARGE DATES. A WASTEWATER SERVICE INVESTIGATOR MAY WITNESS THE DISCHARGE EVENT TO VERIFY COMPLIANCE.

2. THE CONTRACTOR SHALL MONITOR THE WATER FOR CHLORINE RESIDUAL PRIOR TO DISCHARGE. THE ALLOWABLE DISCHARGE LEVEL OF CHLORINE RESIDUAL IS 5 PPM.

3. THE CONTRACTOR SHALL DISCHARGE THE EFFLUENT WATER AT A MAXIMUM ALLOWABLE FLOW RATE OF 50 GPM.

4. THE CONTRACTOR SHALL SUBMIT TO THE DIRECTOR OF THE DEPARTMENT OF ENVIRONMENTAL SERVICES, WITHIN 20 DAYS OF THE DISCHARGING EVENT, A SELF-MONITORING REPORT CERTIFYING THE FLOW RATE OF DISCHARGE, THE EXACT TIME AND DATE OF DISCHARGE, THE DURATION OF DISCHARGE AND TOTAL VOLUME DISCHARGED. THIS REPORT SHALL BE SUBMITTED BY THE CONSTRUCTION SUPERVISOR ON-SITE DURING THE DISCHARGE AND SHALL BE CERTIFIED WITH THE FOLLOWING STATEMENT:

   "I hereby certify that the event was witnessed by myself, and all information is based on actual facts during discharge."

   IN THE EVENT ANY ADVERSE CONDITIONS DO OCCUR DURING THE DISCHARGE PERIOD, AN IMMEDIATE WORK STOPPAGE AND NOTIFICATION TO THE DEPARTMENT OF ENVIRONMENTAL SERVICES OF THE PROBLEM IS REQUIRED.

ADA NOTES

1. ALL SITE WORK SHALL BE IN CONFORMANCE WITH THE U.S. DEPARTMENT OF JUSTICE ADA STANDARDS FOR ACCESSIBLE DESIGN (2010 ED.) AND WITH THE AMERICANS WITH DISABILITIES ACT.

2. CURB RAMPS SHALL NOT EXCEED A SLOPE OF 1:12 (8.33%).

3. SLOPED WALKS TO BUILDINGS SHALL NOT EXCEED A SLOPE OF 1:20 (5%) UNLESS RAILINGS ARE SHOWN ON ARCHITECTURAL PLANS, IN WHICH CASE THE SLOPE SHALL NOT EXCEED 1:12 (8.33%).

4. A 2% MAXIMUM SLOPE LANDING SHALL BE PROVIDED AT PRIMARY ENTRANCES TO BUILDINGS, THE LANDINGS SHALL HAVE MINIMUM DIMENSION STATED IN SECTION 404.

5. RAMPS ARE DEFINED AS ANY WALKWAY BETWEEN SLOPES OF 1:20 (5%) AND 1:12 (8.33%), AND SHALL HAVE A MINIMUM CLEAR WIDTH OF 36" INCLUDING WIDTH BETWEEN RAILS AND A MAXIMUM CROSS-SLOPE OF 2%. RAMPS EXCEEDING 2'-6" VERTICAL SHALL HAVE INTERMEDIATE (2% MAXIMUM SLOPE) LANDINGS HAVING A MINIMUM LENGTH IN THE DIRECTION OF TRAVEL OF 60". BOTTOM LANDINGS AT CHANGES IN RAM DIRECTION SHALL HAVE A MINIMUM LENGTH OF 72".

6. MAXIMUM CROSS SLOPE ON ANY SIDEWALK OR RAMP SHALL BE 2%. MAXIMUM SLOPE WITHIN PARKING STALLS DESIGNATED AS HANDICAPPED PARKING SHALL BE 2% IN ANY DIRECTION.

7. ALL SIDEWALKS SHALL HAVE A 3' MINIMUM CLEAR WIDTH FOR ACCESSIBLE CONFORMANCE.

8. ANY EXISTING CONDITIONS WITHIN THE PROJECT AREA THAT ARE IDENTIFIED AS NON-ACCESSIBLE SHALL IMMEDIATELY BE BROUGHT TO THE ATTENTION OF THE ENGINEER.

TOPOGRAPHIC SURVEY NOTES

TOPOGRAPHIC SURVEY AND BOUNDARY INFORMATION SHOWN HEREON IS BASED UPON TOPOGRAPHIC SURVEY INFORMATION PROVIDED BY CONTROL POINT SURVEYING INC. DATED OCTOBER 11, 2004 (FIELD BOOK NO. 2446)

BENCHMARK

CITY AND COUNTY OF HONOLULU STREET MONUMENT
AT INTERSECTION OF LANAKILA AVE. AND KUAKINI STREET

TOP OF BRASS PIN, ELEV.= 83.71

UTILITY/POTHOLE NOTE

THE TYPES, LOCATIONS, SIZES AND /OR DEPTHS OF EXISTING UNDERGROUND UTILITIES AS SHOWN ARE APPROXIMATE AND WERE OBTAINED FROM SOURCES OF VARYING RELIABILITY. ONLY ACTUAL EXCAVATION WILL REVEAL THE TYPES, EXTENT, SIZES, LOCATIONS AND DEPTHS OF SUCH UNDERGROUND UTILITIES. A REASONABLE EFFORT HAS BEEN MADE TO LOCATE AND DELINEATE ALL KNOWN UNDERGROUND UTILITIES. HOWEVER, THE ENGINEER CAN ASSUME NO RESPONSIBILITY FOR THE COMPLETENESS OR ACCURACY OF ITS DELINEATION OF SUCH UNDERGROUND UTILITIES WHICH MAY BE ENCOUNTERED, BUT WHICH ARE NOT SHOWN ON THESE PLANS. THE CONTRACTOR SHALL BE RESPONSIBLE FOR LOCATING ALL UNDERGROUND FACILITIES AND UTILITIES BY TONING, POTHOLING, OR OTHER UNDERGROUND UTILITY LOCATING METHODS PRIOR TO COMMENCING CONSTRUCTION.

DISCREPANCIES

IF THERE ARE ANY DISCREPANCIES BETWEEN DIMENSIONS IN DRAWINGS AND EXISTING CONDITIONS WHICH WILL AFFECT THE WORK, THE CONTRACTOR SHALL BRING SUCH DISCREPANCIES TO THE ATTENTION OF THE ENGINEER FOR ADJUSTMENT BEFORE PROCEEDING WITH THE WORK. THE CONTRACTOR SHALL BE RESPONSIBLE FOR THE PROPER FITTING OF ALL WORK AND FOR THE COORDINATION OF ALL TRADES, SUBCONTRACTORS, AND PERSONS ENGAGED UPON THIS CONTRACT.

FORE ESTIMATING PURPOSE ONLY:

DESCRIPTION OF WORK	ESTIMATE
1" DOMESTIC SERVICE	
5/8" METER INSTALLATION CHARGE	$500
WATER SYSTEM FACILITIES CHARGES (WSFC) (COMM)	
<50 F.U. = $620.85/ F.U. x 3.0 F.U. = $1,862.55	
>50 F.U. = $220.29/ F.U. x 0.0 F.U. = $	
TOTAL WSFC:	$1,862.55
* CREDIT	
S/N _____	
S/N _____	
____ FIRE SERVICE	
DC METER _____	_____
INSTALLATION CHARGE _____	_____
ONE TIME CHARGE _____	_____
TOTAL:	$2,362.55

*CREDITS WILL BE DETERMINED WHEN THE BUILDING PERMIT APPLICATION IS SUBMITTED FOR BWS REVIEW AND APPROVAL.

THE ESTIMATE IS SUBJECT TO CHANGE. A FORMAL WRITTEN QUOTATION MAY BE OBTAINED AND ALL PAYMENTS FOR THE CHARGES SHOWN ON THE QUOTATION MADE WITHIN THIRTY (30) DAYS AFTER THE CONSTRUCTION PLAN IS APPROVED BY BWS. IF PAYMENTS ARE NOT RECEIVED WITHIN THE 30 DAY PERIOD, THE PROJECT WILL BE SUBJECT TO THE PREVAILING RATES.

	FIXTURE UNITS (F.U.)	PEAK FLOW (GPM)	AVERAGE FLOW (GPD)
A. PROPOSED DOMESTIC	3		
B. PROPOSED IRRIGATION			
C. PROPOSED TOTAL (A+B)	3		

APPROVED BY:

MANAGER & CHIEF ENGINEER, DATE
BOARD OF WATER SUPPLY
(FOR WORK AFFECTING BWS FACILITIES IN
CITY/STATE RIGHT-OF-WAY AND BWS EASEMENT ONLY)

BOWERS + KUBOTA CONSULTING
Project Management • Planning • Architectural/Engineering Design • Construction Management

LANCE K. TAKEHARA
LICENSED PROFESSIONAL ENGINEER
No. 14439-C
HAWAII, U.S.A.

EXPIRATION DATE 04/30/2018

THIS WORK WAS PREPARED BY ME OR UNDER MY SUPERVISION AND CONSTRUCTION OF THIS PROJECT WILL BE UNDER MY OBSERVATION. ("OBSERVATION OF CONSTRUCTION" SHALL BE DEFINED IN CHAPTER 115, HAWAII ADMINISTRATIVE RULES FOR PROFESSIONAL ENGINEERS, SURVEYORS AND LANDSCAPE ARCHITECTS STATE OF HAWAII, SUBCHAPTER 1, SECTION 16-115-2 DEFINITIONS, EFFECTIVE 8/29/94.)

MALUHIA AUXILIARY PARKING LOT

TMK:1-6-009:001

DATE	ISSUANCE

NO.	DATE	DESCRIPTION	APRPOVED

BUILDING	NAME		
PROJECT	TMK	1-6-009:001	
	DESCRIPT.	MALUHIA AUXILIARY PARKING LOT	
	NUMBER	12A6506.00	
	DRAWN BY	SD/ET	CHECKED BY LT
	DATE	APRIL 17, 2017	
DRAWING	TITLE	**NOTES-02**	
	NUMBER	**C**	**0** / **03**
		TYPE	SERIES / SEQUENCE

BOWERS + KUBOTA CONSULTING
• Project Management • Planning • Architectural/Engineering Design • Construction Mangement

ABBREVIATIONS

AB	–	AGGREGATE BASE
AC	–	ASPHALT CONCRETE
AD	–	AREA DRAIN
ADA	–	AMERICANS WITH DISABILITIES ACT
ASB	–	AGGREGATE SUBBASE
BFP	–	BACK FLOW PREVENTOR
BLDC	–	BUILDING CORNER
BLDG	–	BUILDING
BOL	–	BOLLARD
BW	–	BOTTOM OF WALL
BWS	–	BOARD OF WATER SUPPLY
C, CONC	–	CONCRETE
CB	–	CATCH BASIN
CI	–	CURB INLET
CIP	–	CAST IRON PIPE
CL	–	CENTER LINE OR CLASS
CLF	–	CHAIN LINK FENCE
CMP	–	CORRUGATED METAL PIPE
CO	–	CLEANOUT
CONST	–	CONSTRUCTION OR CONSTRUCT
CY	–	CUBIC YARD
DCDA	–	DOUBLE CHECK DETECTOR ASSEMBLY
DI	–	DROP INLET
DIP	–	DUCTILE IRON PIPE
DOM	–	DOMESTIC
DW	–	DOMESTIC WATER
DWG	–	DRAWING
E	–	EAST
EP	–	EDGE OF PAVEMENT
ER	–	END OF RETURN
EVC	–	END VERTICAL CURVE
ELEV	–	ELEVATION
EX., EXIST.	–	EXISTING
FC	–	FACE OF CURB
FDC	–	FIRE DEPARTMENT CONNECTION
FF	–	FINISHED FLOOR
FG	–	FINISHED GRADE
FH	–	FIRE HYDRANT
FL	–	FLOW LINE
FOUND	–	FOUNDATION
FS	–	FINISHED SURFACE
FT	–	FOOT
FW	–	FIRE WATER
G	–	GROUND ELEVATION
GB	–	GRADE BREAK
GV	–	GATE VALVE
HCR	–	ACCESSIBLE RAMP
HP	–	HIGH POINT
INV	–	INVERT ELEVATION
JP	–	JOINT POLE
JT	–	JOINT TRENCH
LIP	–	LIP OF GUTTER
LOW	–	LIMIT OF WORK
LP	–	LOW POINT
LSA	–	LANDSCAPE ARCHITECT
MAX	–	MAXIMUM
MEP	–	MECHANICAL/ELECTRICAL/ PLUMBING
MH	–	MANHOLE
MIN	–	MINIMUM
MON	–	MONUMENT
MSL	–	MEAN SEAL LEVEL
N	–	NORTH
NO	–	NUMBER
NTS	–	NOT TO SCALE
O.C.	–	ON CENTER
P	–	PAVEMENT ELEVATION
PCC	–	PORTLAND CEMENT CONCRETE
PIV	–	POST INDICATOR VALVE
PL	–	PROPERTY LINE
PMH	–	POWER MANHOLE
POC	–	POINT ON CURVE
PP	–	POWER POLE
PVC	–	POLYVINYL CHLORIDE PIPE
R	–	RADIUS
RC	–	RELATIVE COMPACTION
RCP	–	REINFORCED CONCRETE PIPE
RPPA	–	REDUCED PRESSURE PRINCIPLE ASSEMBLY
R/W	–	RIGHT OF WAY
S	–	SLOPE OR SOUTH
S.A.D.	–	SEE ARCHITECTURAL DRAWINGS
SD	–	STORM DRAIN
SDAD	–	STORM DRAIN AREA DRAIN
SDCB	–	STORM DRAIN CATCH BASIN
SDCO	–	STORM DRAIN CLEAN OUT
SDJB	–	STORM DRAIN JUNCTION BOX
SG	–	SUBGRADE
SS	–	SANITARY SEWER
STA	–	STATION
STD	–	STANDARD
S/W	–	SIDEWALK
TC	–	TOP OF CURB
TD	–	TRENCH DRAIN
TOD	–	TOP OF DOCK
TOE	–	TOE OF SLOPE
TOS	–	TOP OF STAIR
TS	–	TOP OF SLAB
TYP	–	TYPICAL
TW	–	FG @ TOP OF WALL
UON	–	UNLESS OTHERWISE NOTED
U/G	–	UNDERGROUND
WM	–	WATER METER
WV	–	WATER VALVE
W	–	WEST
WWF	–	WELDED WIRE FABRIC
W/	–	WITH

LEGEND

	EXISTING	PROPOSED
SAWCUT AND CONFORM LINE		
A.C. PAVEMENT		
CONC. SIDEWALK OR PAD		
EDGE OF CONC. PAVEMENT		
6" VERTICAL CURB		
WATER MAIN	W	W
STORM DRAIN MAIN	SD	SD
IRRIGAION MAIN	IRR	IRR
PERFORATED PIPE SD MAIN	PERF	PERF
FLOW LINE		
CHAIN LINK FENCE	x x	x x
JOINT TRENCH	JT	JT
UNDERGROUND ELECTRIC LINE	E	E
WATER METER	WM	WM
WATER VALVE	WV	WV
FIRE HYDRANT		
WATER LINE TEE		
SANITARY SEWER MANHOLE		
STORM DRAIN MANHOLE		
ELECTROLIER		

CONSTRUCTION DETAIL REFERENCE

1 / C501 — DETAIL REFERENCE / SHEET REFERENCE

BOWERS + KUBOTA CONSULTING

Project Management • Planning • Architectural/Engineering Design • Construction Management

LANCE K. TAKEHARA
LICENSED PROFESSIONAL ENGINEER
No. 14439-C
HAWAII, U.S.A.

EXPIRATION DATE 04/30/2018

THIS WORK WAS PREPARED BY ME OR UNDER MY SUPERVISION AND CONSTRUCTION OF THIS PROJECT WILL BE UNDER MY OBSERVATION. ("OBSERVATION OF CONSTRUCTION" SHALL BE DEFINED IN CHAPTER 115, HAWAII ADMINISTRATIVE RULES FOR PROFESSIONAL ENGINEERS, SURVEYORS AND LANDSCAPE ARCHITECTS STATE OF HAWAII, SUBCHAPTER 1, SECTION 16-115-2 DEFINITIONS, EFFECTIVE 8/29/94.)

MALUHIA AUXILIARY PARKING LOT

TMK:1-6-009:001

DATE	ISSUANCE

NO.	DATE	DESCRIPTION	APRPOVED

BUILDING	NAME			
	TMK	1-6-009:001		
PROJECT	DESCRIPT.	MALUHIA AUXILIARY PARKING LOT		
	NUMBER	12A6506.00		
	DRAWN BY	SD/ET	CHECKED BY	LT
	DATE	APRIL 17, 2017		
DRAWING	TITLE	**LEGEND AND ABBREVIATIONS**		
	NUMBER	**C**	**0**	**04**
		TYPE	SERIES	SEQUENCE

BOWERS + KUBOTA CONSULTING

• Project Management • Planning • Architectural/Engineering Design • Construction Mangement

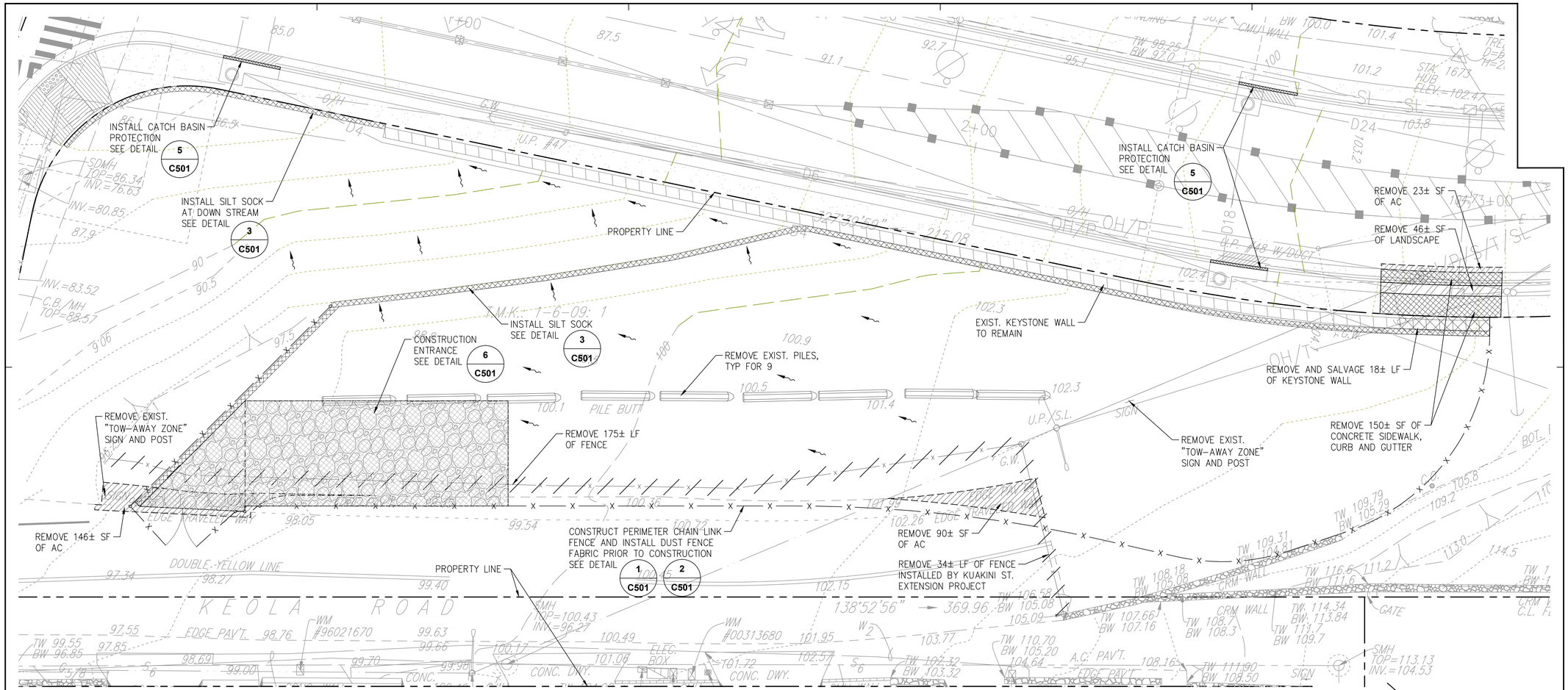

EXISTING, DEMO AND EROSION CONTROL PLAN

SCALE: 1" = 10'

EROSION CONTROL NOTES:

1. IT IS THE CONTRACTOR'S RESPONSIBILITY TO ENSURE EROSION CONTROL MEASURES ARE IN PLACE PRIOR TO THE START OF CONSTRUCTION AND THAT THEY ARE MAINTAINED FOR THE DURATION OF CONSTRUCTION ACTIVITIES. REPLACEMENT SUPPLIES SHALL BE KEPT ON SITE.
2. CONTRACTOR SHALL PREVENT DUST, RESULTING FROM HIS WORK, FROM BECOMING AIRBORNE AT ALL TIMES, INCLUDING NON-WORKING HOURS, WEEKENDS AND HOLIDAYS, IN CONFORMANCE WITH THE STATE DEPARTMENT OF HEALTH ADMINISTRATIVE RULES, TITLE 11, CHAPTER 60-AIR POLLUTION CONTROL. CONTRACTOR SHALL PROVIDE DUST CONTROL BY USE OF A WATER TRUCK OR HOSE TO DAMPEN THE AREA WITH WATER.
3. BEST MANAGEMENT PRACTICES (BMP'S) SHALL NOT BE REMOVED UNTIL ALL PERMANENT EROSION CONTROLS ARE IN PLACE AND ESTABLISHED, AT WHICH TIME ALL TEMPORARY EROSION CONTROL BMP'S SHALL BE REMOVED.
4. ALL CONTROL MEASURES SHALL BE INSPECTED AT LEAST ONCE PER WEEK AND BEFORE AND AFTER EACH STORM EVENT, AND EVERY 24 HOURS FOR EXTENDED STORM EVENTS, TO IDENTIFY AREAS THAT CONTRIBUTE TO EROSION AND SEDIMENT PROBLEMS OR ANY OTHER POLLUTANT DISCHARGES. IF ADDITIONAL MEASURES ARE NEEDED, REVISE THE EROSION CONTROL PLAN AND IMPLEMENT THE MEASURES IMMEDIATELY. DOCUMENT ALL INSPECTION FINDINGS AND ACTIONS TAKEN.
5. ALL EXPOSED AREAS SHALL BE GRASSED OR LANDSCAPED AT FINISHED GRADE AFTER GRADING IS COMPLETE.

BEST MANAGEMENT PRACTICE NOTES

1. MEASURES TO CONTROL EROSION AND OTHER POLLUTANTS SHALL BE IN PLACE BEFORE ANY WORK IS INITIATED. THESE MEASURES AS INDICATED IN THIS PROJECT SHALL BE PROPERLY CONSTRUCTED AND MAINTAINED THROUGHOUT THE CONSTRUCTION PERIOD. STORM PROTECTION FOR NEW DRAIN INLETS/ AREA DRAINS SHALL BE PROVIDED AFTER THE STRUCTURES HAVE BEEN CONSTRUCTED.
2. ALL TEMPORARY EROSION CONTROL MEASURES SHALL BE CHECKED AND REPAIRED AS NECESSARY.
3. GRASSING OF EXPOSED AREAS TO BE DONE AS FINISH GRADES ARE ESTABLISHED.
4. ALL TEMPORARY EROSION CONTROL MEASURES SHALL BE REMOVED BY THE CONTRACTOR AFTER COMPLETION OF THE PROJECT PRIOR TO FINAL ACCEPTANCE OR AS DIRECTED BY THE ENGINEER IN THE FIELD.
5. ALL EXISTING AND NEW STORM INLETS ON SITE AND THOSE OFFSITE WHICH MAY RECEIVE RUN OFF FROM THE SITE SHALL USE AN INLET PROTECTION DEVICE. INLET PROTECTION AT INLETS WILL BE PROVIDED AFTER STRUCTURE HAS BEEN CONSTRUCTED. THE CONTRACTOR SHALL REGULARLY INSPECT ALL INLETS AND REMOVE ACCUMULATED SILT AND DEBRIS. FLUSHING IS PROHIBITED.

APPROVED BY:

CHIEF, CIVIL ENGINEERING BRANCH, DPP DATE

BOWERS + KUBOTA CONSULTING
Project Management • Planning • Architectural/Engineering Design • Construction Management

LANCE K. TAKEHARA
LICENSED PROFESSIONAL ENGINEER
No. 14439-C
HAWAII, U.S.A.

EXPIRATION DATE 04/30/2018

THIS WORK WAS PREPARED BY ME OR UNDER MY SUPERVISION AND CONSTRUCTION OF THIS PROJECT WILL BE UNDER MY OBSERVATION. ("OBSERVATION OF CONSTRUCTION" SHALL BE DEFINED IN CHAPTER 115, HAWAII ADMINISTRATIVE RULES FOR PROFESSIONAL ENGINEERS, SURVEYORS AND LANDSCAPE ARCHITECTS STATE OF HAWAII, SUBCHAPTER 1, SECTION 16-115-2 DEFINITIONS, EFFECTIVE 8/29/94.)

MALUHIA AUXILIARY PARKING LOT

TMK: 1-6-009:001

DATE	ISSUANCE

NO.	DATE	DESCRIPTION	APRPOVED

BUILDING	NAME			
	TMK	1-6-009:001		
PROJECT	DESCRIPT.	MALUHIA AUXILIARY PARKING LOT		
	NUMBER	12A6506.00		
	DRAWN BY	SD/ET	CHECKED BY	LT
	DATE	APRIL 17, 2017		
DRAWING	TITLE	EXISTING, DEMO AND EROSION CONTROL PLAN		
	NUMBER	C	1	01
		TYPE	SERIES	SEQUENCE

BOWERS + KUBOTA CONSULTING
Project Management • Planning • Architectural/Engineering Design • Construction Management

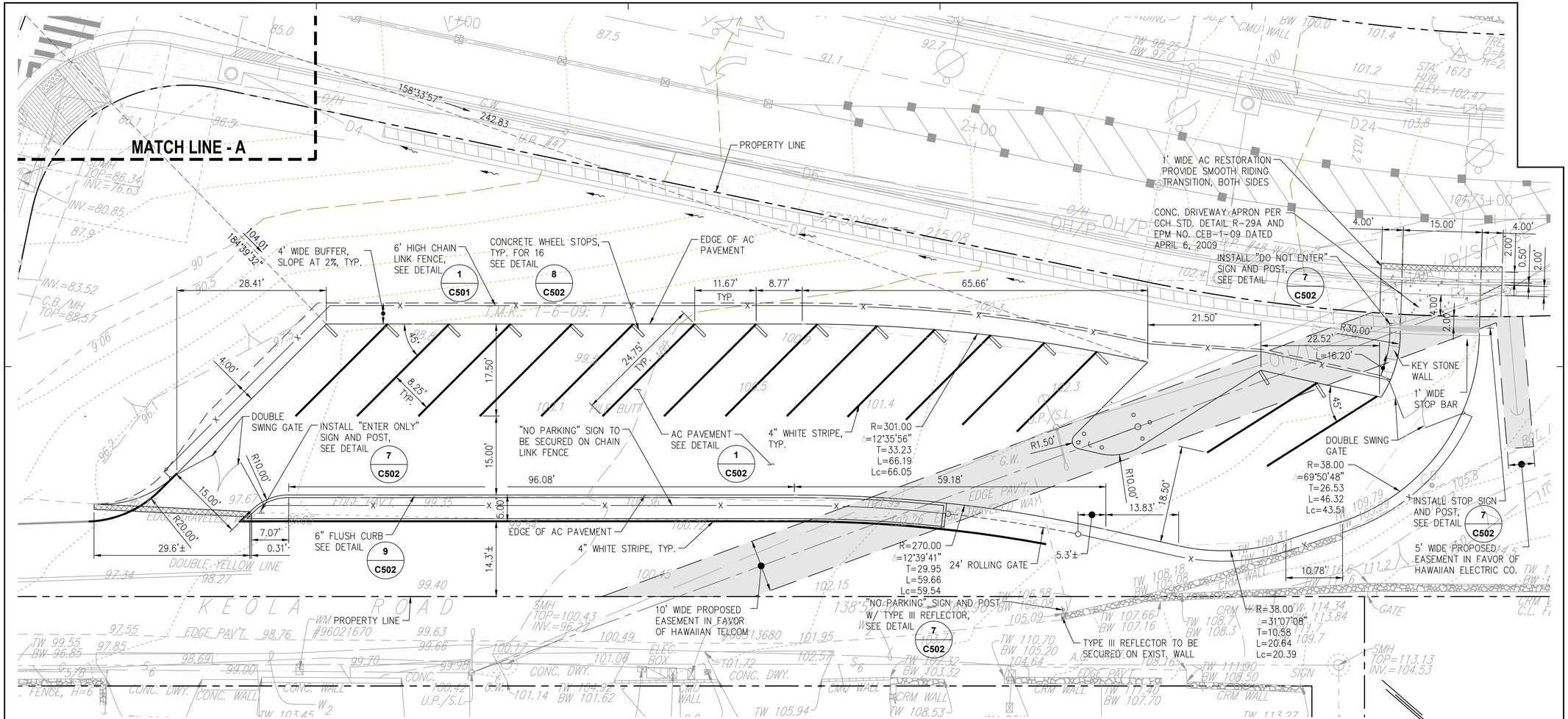

SITE LAYOUT PLAN

SCALE: 1" = 10'

BENCH MARK LOCATION PLAN

SCALE: 1" = 10'

APPROVED BY:

CHIEF, CIVIL ENGINEERING BRANCH, DPP DATE

BOWERS + KUBOTA CONSULTING

Project Management • Planning • Architectural/Engineering Design • Construction Management

LANCE K. TAKEHARA
LICENSED PROFESSIONAL ENGINEER
No. 14439-C
HAWAII, U.S.A.

EXPIRATION DATE 04/30/2018

THIS WORK WAS PREPARED BY ME OR UNDER MY SUPERVISION AND CONSTRUCTION OF THIS PROJECT WILL BE UNDER MY OBSERVATION. ("OBSERVATION OF CONSTRUCTION" SHALL BE DEFINED IN CHAPTER 115, HAWAII ADMINISTRATIVE RULES FOR PROFESSIONAL ENGINEERS, SURVEYORS AND LANDSCAPE ARCHITECTS STATE OF HAWAII, SUBCHAPTER 1, SECTION 16-115-2 DEFINITIONS, EFFECTIVE 8/29/94.)

MALUHIA AUXILIARY PARKING LOT

TMK: 1-6-009:001

DATE	ISSUANCE

NO.	DATE	DESCRIPTION	APRPOVED

BUILDING	NAME			
PROJECT	TMK	1-6-009:001		
	DESCRIPT.	MALUHIA AUXILIARY PARKING LOT		
	NUMBER	12A6506.00		
	DRAWN BY	SD/ET	CHECKED BY	LT
	DATE	APRIL 17, 2017		
DRAWING	TITLE	SITE LAYOUT PLAN		
	NUMBER	C	1	02
		TYPE	SERIES	SEQUENCE

BOWERS + KUBOTA CONSULTING

• Project Management • Planning • Architectural/Engineering Design • Construction Mangement

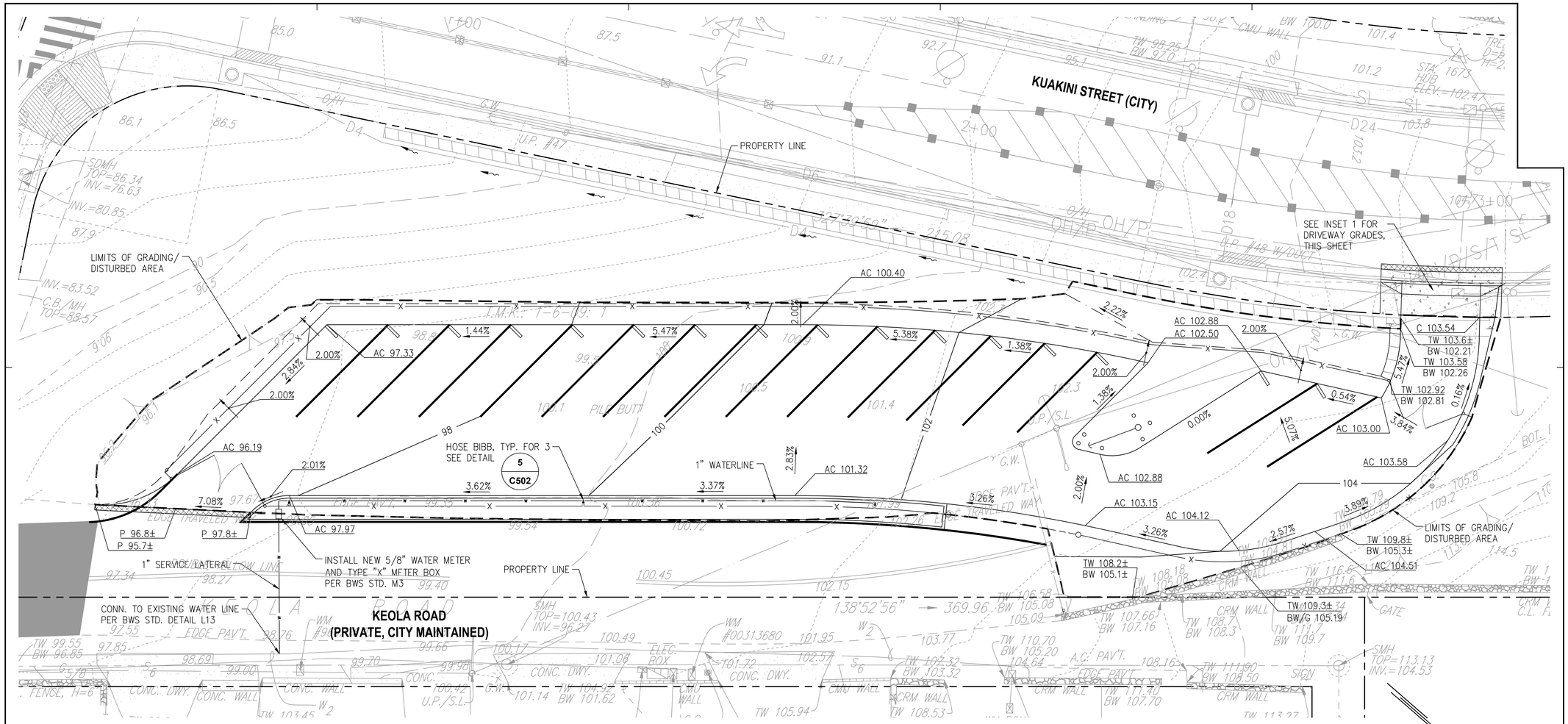

GRADING PLAN

SCALE: 1" = 10'

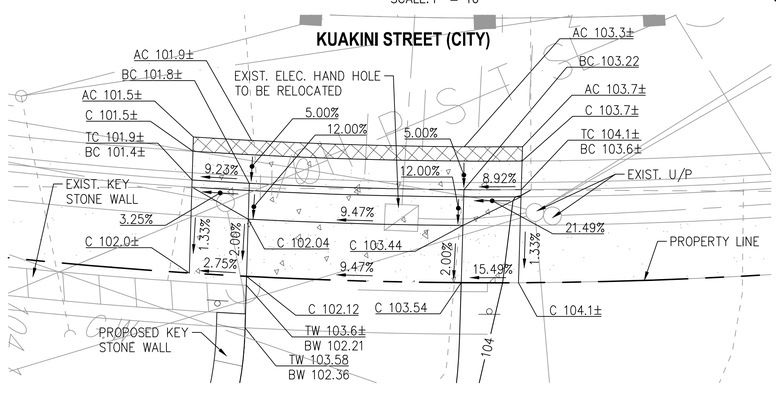

INSET 1

SCALE: 1" = 5'

EARTHWORK QUANTITIES:

IMPORT = 0 CY
EXPORT = 338 CY
FILL = 9 CY
CUT = 347 CY
(IF ZERO, INDICATE 0)
AREA TO BE GRADED = 0.24 ACRES
AREA TO BE DISTURBED = 0.24 ACRES

NOTE:
EARTHWORK QUANTITIES SHOWN ON THE PLANS OR REPRESENTED BY THE ENGINEER ARE APPROXIMATE AND ARE FOR GRADING PERMIT APPROVAL ONLY. IT SHALL BE THE CONTRACTOR'S RESPONSIBILITY TO INCLUDE ALL MATERIAL AND LABOR REQUIRED WITHIN THE BID PRICE AND TO CARRY OUT THE CUT/FILL, IMPORT/EXPORT AS NECESSARY TO MEET THE DESIGN GRADES AS SHOWN ON THE PLANS REGARDLESS OF THE ESTIMATED EARTHWORK QUANTITIES AS INDICATED. SIGNIFICANT REVISIONS TO THE QUANTITIES NEED REVIEW BY THE CITY. FILL SHORTAGE IS ANTICIPATED TO COME FROM ON-SITE SPOILS ACQUIRED FROM UTILITY TRENCHES AND FOOTING SPOILS.

CONTRACTOR IS TO DELIVER TO OWNER THE PROJECT IN A COMPLETE AND OPERATIONAL MANNER. THE CONTRACTOR IS RESPONSIBLE FOR ANY INVESTIGATION OR STUDIES THAT ARE REQUIRED BY THE CONTRACTOR TO SATISFY THIS REQUIREMENT. NO ADDITIONAL COMPENSATION SHALL BE PAID FOR SAID CUT/FILL AND/OR IMPORT/EXPORT.

APPROVED BY:

CHIEF, CIVIL ENGINEERING BRANCH, DPP DATE

BOWERS + KUBOTA CONSULTING
Project Management • Planning • Architectural/Engineering Design • Construction Management

LANCE K. TAKEHARA
LICENSED PROFESSIONAL ENGINEER
No. 14439-C
HAWAII, U.S.A.
EXPIRATION DATE 04/30/2018

THIS WORK WAS PREPARED BY ME OR UNDER MY SUPERVISION AND CONSTRUCTION OF THIS PROJECT WILL BE UNDER MY OBSERVATION. ("OBSERVATION OF CONSTRUCTION" SHALL BE DEFINED IN CHAPTER 115, HAWAII ADMINISTRATIVE RULES FOR PROFESSIONAL ENGINEERS, SURVEYORS AND LANDSCAPE ARCHITECTS STATE OF HAWAII, SUBCHAPTER 1, SECTION 16-115-2 DEFINITIONS, EFFECTIVE 8/29/94.)

MALUHIA AUXILIARY PARKING LOT

TMK: 1-6-009:001

NO.	DATE	DESCRIPTION	APRPOVED

DATE	ISSUANCE

BUILDING	NAME		
PROJECT	TMK	1-6-009:001	
	DESCRIPT.	MALUHIA AUXILIARY PARKING LOT	
	NUMBER	12A6506.00	
	DRAWN BY	SD/ET	CHECKED BY LT
	DATE	APRIL 17, 2017	
DRAWING	TITLE	GRADING PLAN	
	NUMBER	C 1 03	
		TYPE	SERIES SEQUENCE

BOWERS + KUBOTA CONSULTING
• Project Management • Planning • Architectural/Engineering Design • Construction Mangement

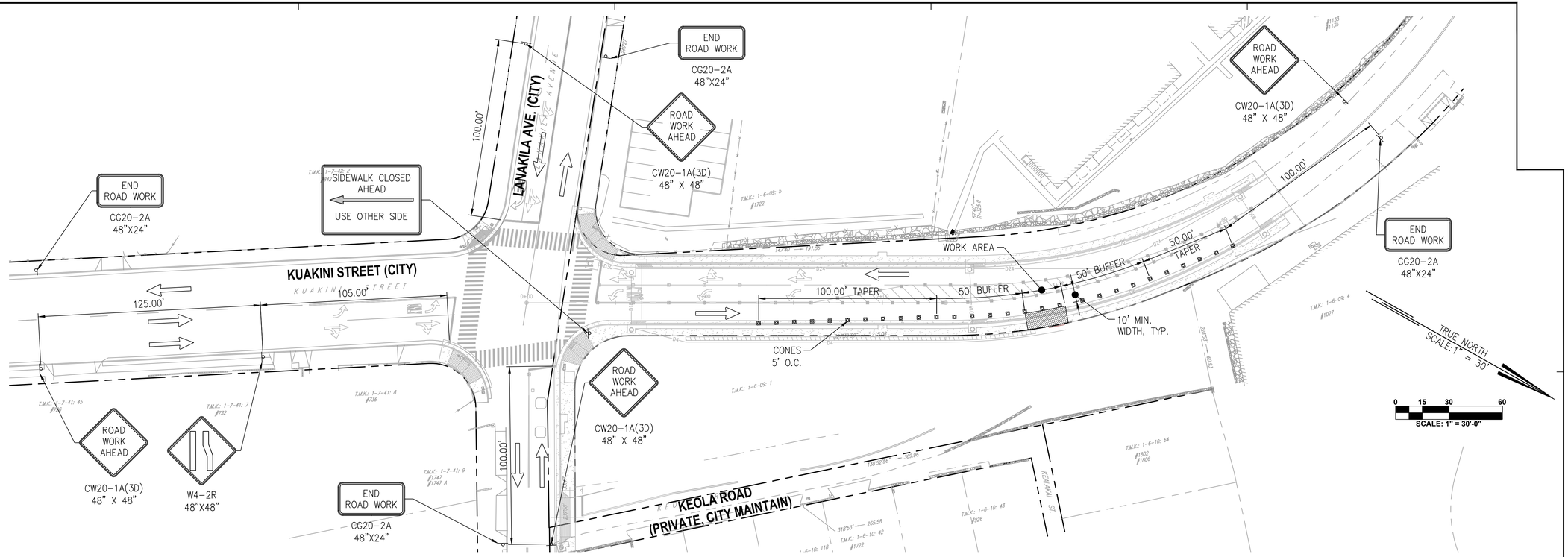

TRAFFIC CONTROL PLAN

SCALE: 1" = 30'

POSTED SPEED LIMIT = 25 MPH

GENERAL NOTES FOR TRAFFIC CONTROL PLAN:

1. THE PERMITTEE SHALL MAKE MINOR ADJUSTMENTS AT INTERSECTIONS, DRIVEWAYS, BRIDGES, STRUCTURES, ETC., TO FIT FIELD CONDITIONS.
2. CONES OR DELINEATORS SHALL BE EXTENDED TO POINT WHERE THEY ARE VISIBLE TO APPROACHING TRAFFIC.
3. TRAFFIC CONTROL DEVICES SHALL BE INSTALLED SUCH THAT THE SIGN OR DEVICE FARTHEST FROM THE WORK AREA IS PLACED FIRST. THE OTHERS SHALL THEN BE PLACED PROGRESSIVELY TOWARD THE WORK AREA.
4. REGULATORY AND WARNING SIGNS WITHIN THE CONSTRUCTION ZONE THAT ARE IN CONFLICT WITH THE TRAFFIC CONTROL PLANS SHALL BE REMOVED OR COVERED.
5. FLAGGERS AND / OR POLICE OFFICERS SHALL BE IN SIGHT OF EACH OTHER OR IN DIRECT COMMUNICATION AT ALL TIMES.
6. WHEN REQUIRED BY THE ISSUING OFFICE, THE PERMITTEE SHALL INSTALL A FLASHING ARROW SIGNAL AS SHOWN ON THE TRAFFIC CONTRL PLANS.
7. ALL TRAFFIC LANES SHALL BE A MINIMUM OF 10 FEET WIDE.
8. ALL CONSTRUCTION WARNING SIGNS SHALL BE PROMPTLY REMOVED OR COVERED WHENEVER THE MESSAGE IS NOT APPLICABLE OR NOT IN USE.
9. THE BACKS OF ALL SIGNS USED FOR TRAFFIC CONTROL SHALL BE APPROPRIATELY COVERED TO PRECLUDE THE DISPLAY OF INAPPLICABLE SIGN MESSAGES (I.E., WHEN SIGNS HAVE MESSAGES ON BOTH FACES).
10. LANE CLOSURE SHALL BE LIMITED ONLY TO THE EXTENT OF ACCOMPLISHING EACH DAY'S WORK. AS SOON AS EACH DAY'S WORK IS COMPLETED, THE PERMITTEE SHALL REMOVE ALL TRAFFIC CONTROL DEVICES NO LONGER NEEDED TO PERMIT FREE AND SAFE PASSAGE OF PUBLIC TRAFFIC. REMOVAL SHALL BE IN THE REVERSE ORDER OF INSTALLATION. EXISTING FADED OR OBLITERATED PAVEMENT MARKINGS THAT ARE NECESSARY FOR SAFE TRAFFIC FLOW IN THE CONSTRUCTION AREA SHALL BE REPLACED WITH TEMPORARY OR PERMANENT MARKINGS BEFORE OPENING THE ROADWAY TO PUBLIC TRAFFIC EACH DAY.
11. PERMANENT PAVEMENT MARKINGS AND TRAFFIC SIGNS SHALL BE REPLACED UPON COMPLETION OF EACH PHASE OF WORK.
12. CONES AND DELINEATORS SHALL BE SPACED AT A MAXIMUM DISTANCE OF 20 FEET APART. A MINIMUM OF SIX CHANNELIZING DEVICES SHALL BE USED FOR EACH TAPER LENGTH.
13. DRIVEWAYS SHALL BE KEPT OPEN UNLESS THE OWNERS OF THE PROPERTY USING THE DRIVEWAY ARE OTHERWISE PROVIDED FOR SATISFACTORILY. FURTHER, THE PERMITTEE SHALL CONTROL TRAFFIC GOING INTO AND OUT OF DRIVEWAYS.
14. BUFFER AND TAPER AREA ON APPROACH TO ANY WORK AREA SHALL BE KEPT CLEAR OF VEHICLES AND EQUIPMENT.

GENERAL NOTES FOR TRAFFIC CONTROL PLAN Cont.:

15. A HIGH LEVEL WARNING DEVICE (FLAG TREE) SHALL BE INSTALLED ON APPROACH TO ALL WORK AREAS.
16. "NO PARKING" SIGNS SHALL BE POSTED WITHIN ANY WORK AREA AND FOR THE BUFFER AND TAPER AREAS APPROACHING THE WORK AREA.
17. TRAFFIC CONTROL PLANS ARE APPROVED FOR WORK ON ANY CITY STREET AREA ONLY BETWEEN THE HOURS OF 08:30 A.M. AND 03:30 P.M. (MONDAY–FRIDAY).

TRAFFIC NOTES FOR WORK ON CITY AND COUNTY STREETS:

1. A PERMIT SHALL BE OBTAINED FROM THE DEPARTMENT OF TRANSPORTATION SERVICES BEFORE WORK ON ANY PORTION OF A PUBLIC STREET OR HIGHWAY MAY BEGIN. CONSTRUCTION TRAFFIC CONTROL PLANS APPROVED BY THE DEPARTMENT OF TRANSPORTATION SERVICES AND/OR THE DEPARTMENT OF PLANNING AND PERMITTING MUST BE PROVIDED WHEN APPLYING FOR THE PERMIT.
2. THE CONTRACTOR SHALL PROVIDE, INSTALL, AND MAINTAIN ALL NECESSARY SIGNS AND OTHER PROTECTIVE FACILITIES, WHICH SHALL CONFORM WITH THE "HAWAII ADMINISTRATION RULES GOVERNING THE USE OF TRAFFIC CONTROL DEVICES AT WORK SITES ON OR ADJACENT TO PUBLIC STREETS AND HIGHWAYS" ADOPTED BY THE DIRECTOR OF TRANSPORTATION, AND THE CURRENT U.S. FEDERAL HIGHWAYS ADMINISTRATION'S "MANUAL ON UNIFORM TRAFFIC CONTROL DEVICES FOR STREET AND HIGWAYS, PART VI – TRAFFIC CONTROLS FOR STREET AND HIGHWAY CONSTRUCTION AND MAINTENANCE OPERATIONS."
3. WORK ON ANY CITY STREET AREA MAY BE PERFORMED ONLY BETWEEN THE HOURS OF 8:30 A.M. TO 3:30 P.M., MONDAY THROUGHT FRIDAY, UNLESS OTHERWISE PERMITTED BY THE DEPARTMENT OF TRANSPORTATION SERVICES.
4. DURING WORKING HOURS, THE CONTRACTOR SHALL PROVIDE FOR THROUGH TRAFFIC. DURING NON–WORKING HOURS, ALL TRENCHES SHALL BE COVERED WITH A SAFE NON–SKID BRIDGING MATERIAL AND ALL LANES SHALL BE OPEN TO TRAFFIC.
5. AS REQUIRED BY THE DEPARTMENT OF TRANSPORTATION SERVICES, THE CONTRACTOR SHALL PROVIDE OFF–DUTY POLICE OFFICERS TO CONTROL THE FLOW OF TRAFFIC.
6. WHERE PEDESTRIAN WALKWAYS EXIST, THEY SHALL BE MAINTAINED IN PASSABLE CONDITION OR OTHER FACILITIES FOR PEDESTRIANS SHALL BE PROVIDED. PASSAGE BETWEEN WALKWAYS AT INTERSECTIONS SHALL LIKEWISE BE PROVIDED.

TRAFFIC NOTES FOR WORK ON CITY AND COUNTY STREETS Cont.:

7. DRIVEWAYS SHALL BE KEPT OPEN UNLESS THE OWNERS OF THE PROPERTY USING THESE RIGHTS–OF–WAY ARE OTHERWISE PROVIDED FOR SATISFACTORILY.
8. CONTRACTOR SHALL REFERENCE TO THE APPROVAL OF THE DEPARTMENT OF TRANSPORTATION SERVICES AND THE DEPARTMENT OF PLANNING AND PERMITTING, ALL EXISTING TRAFFIC SIGNS, POSTS AND PAVEMENT MARKINGS PRIOR TO THE COMMENCEMENT OF CONSTRUCTION. THE CONTRACTOR SHALL REPLACE OR REPAIR ALL TRAFFIC SIGN, POSTS AND PAVEMENT MARKINGS DISTURBED BY HIS ACTIVITIES.
9. THE CONTRACTOR SHALL NOTIFY THE DEPARTMENT OF PLANNING AND PERMITTING AT 768–8084 ONE (1) WEEK PRIOR TO ANY WORK TO BE DONE ON SIGNS, POST AND PAVEMENT MARKINGS.
10. NO EQUIPMENT SHALL BE STORED WITHIN STREET RIGHTS–OF–WAY EXCEPT AT LOCATIONS DESIGNATED IN WRITING AND APPROVED BY THE DEPARTMENT OF TRANSPORTATION SERVICES.
11. (specify name of individual or company) SHALL ENSURE THAT THE CONTRACTOR INSTALLS THE CONSTRUCTION TRAFFIC CONTROL DEVICES IN ACCORDANCE WITH THE MUTCD

LEGEND

TRAFFIC OF FLOW

SIGNS (RETROREFLECTIVE)

CONES (RETROREFLECTIVE)

PROPERTY LINE

NOTES:

1. ALL FIRE HYDRANTS WITHIN THE CLOSED WORK AREA SHALL BE ACCESSIBLE TO THE RESPONDING EMERGENCY VEHICLES AT ALL TIMES.
2. DURING NON–WORKING HOURS, ALL TRENCHES SHALL BE COVERED WITH A SAFE NON–SKID BRIDGING MATERIAL WITH COLD PAVED RAMPS. THE RAMPS SHALL BE FLUSH WITH OR PROVIDE A ACCEPTABLE SMOOTH RIDING TRANSITION WITH EXISTING ADJACENT PAVEMENTS.

APPROVED BY:

CHIEF, TRAFFIC REVIEW BRANCH, DPP DATE

BOWERS + KUBOTA CONSULTING

Project Management • Planning • Architectural/Engineering Design • Construction Management

LANCE K. TAKEHARA
LICENSED PROFESSIONAL ENGINEER
No. 14439-C
HAWAII, U.S.A.

EXPIRATION DATE 04/30/2018

THIS WORK WAS PREPARED BY ME OR UNDER MY SUPERVISION AND CONSTRUCTION OF THIS PROJECT WILL BE UNDER MY OBSERVATION. ("OBSERVATION OF CONSTRUCTION" SHALL BE DEFINED IN CHAPTER 115, HAWAII ADMINISTRATIVE RULES FOR PROFESSIONAL ENGINEERS, SURVEYORS AND LANDSCAPE ARCHITECTS STATE OF HAWAII, SUBCHAPTER 1, SECTION 16–115–2 DEFINITIONS, EFFECTIVE 8/29/94.)

MALUHIA AUXILIARY PARKING LOT

TMK:1–6–009:001

DATE	ISSUANCE

NO.	DATE	DESCRIPTION	APRPOVED

BUILDING	NAME			
	TMK	1–6–009:001		
PROJECT	DESCRIPT.	MALUHIA AUXILIARY PARKING LOT		
	NUMBER	12A6506.00		
DRAWING	DRAWN BY	SD/ET	CHECKED BY	LT
	DATE	APRIL 17, 2017		
	TITLE	TRAFFIC CONTROL PLAN		
	NUMBER	C	1	04
		TYPE	SERIES	SEQUENCE

BOWERS + KUBOTA CONSULTING

• Project Management • Planning • Architectural/Engineering Design • Construction Mangement

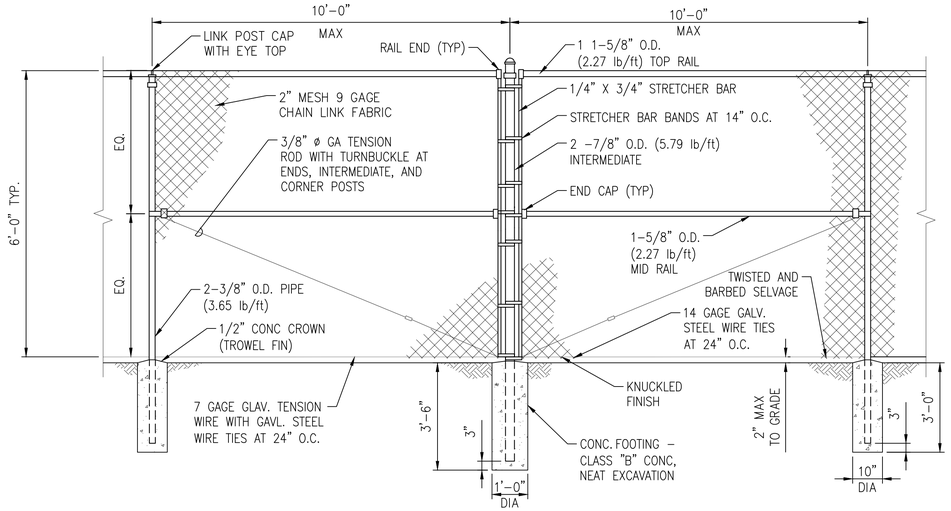

FIRST LINE POST | **SLOPE, CORNER, END OR PULL POST** | **FIRST LINE POST**

TYPICAL CHAIN LINK FENCE (1)

N.T.S.

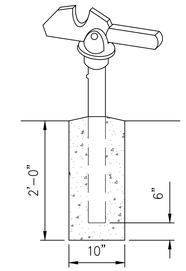

GATE KEEPER (TO HOLD GATE OPEN)

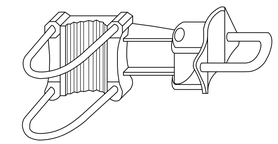

OFFSET HINGE

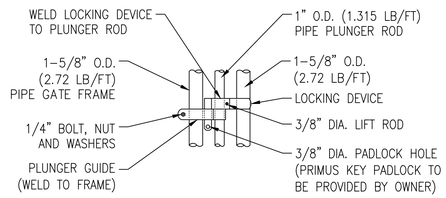

LOCKING DEVICE DETAIL

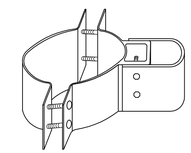

STANDAR HINGE

SWING GATE DETAIL (3)

N.T.S.

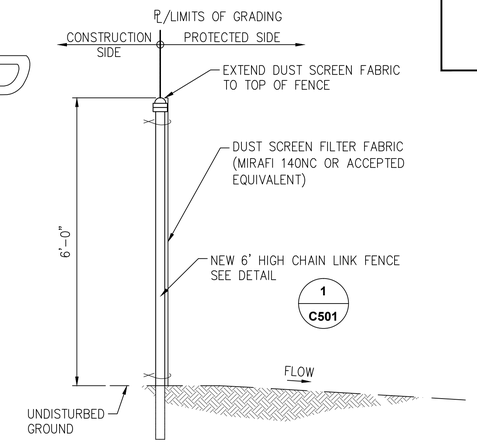

TEMPORARY DUST FENCE WITHOUT RUN-OFF PROTECTION (4)

N.T.S.

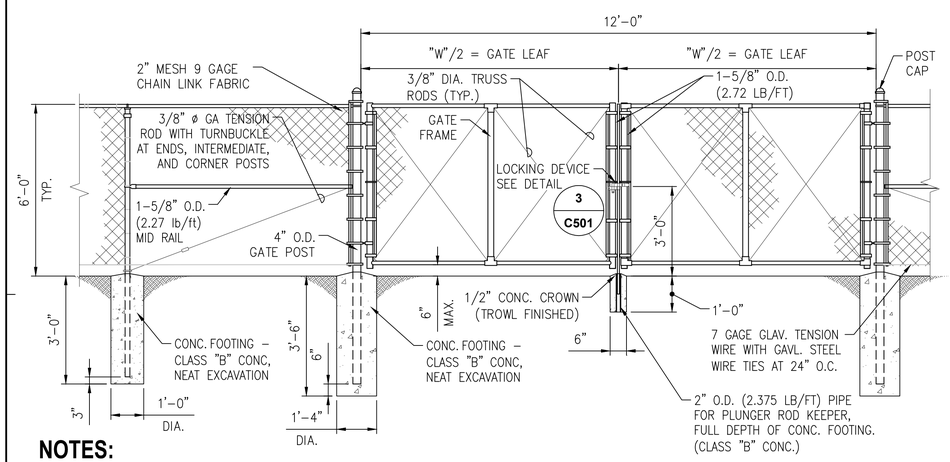

NOTES:

1. ALL PIPE AND POST SIZES ARE NOMINAL DIAMETER (N.D.).
2. DETAILS SHOWN ARE TO CLARIFY REQUIREMENTS AND ARE NOT INTENDED TO LIMIT OTHER TYPE OF FENCE SECTIONS AND METHODS OF INSTALLATION THAT COMPLY WITH THE SPECIFICATIONS.
3. SWING GATES SHALL BE CONSTRUCTED WITH DROP RODS, PADLOCKS, LATCH ASSEMBLY AND GATE KEEPERS EXCEPT AS NOTED.
4. ALL GATE FRAMES SHALL MEET THE MINIMUM REQUIREMENTS OF ASTM F900 1.90" NOMINAL (ROUND) OR 2.00" NOMINAL (SQUARE). GATE FRAMES SHALL BE OF WELDED CONSTRUCTION OR SHALL BE ASSEMBLED USING HEAVY FITTINGS. AT CONTRACTOR'S OPTION A WELDED HORIZONTAL BRACE MAY BE USED IN LIEU OF TRUSS RODS TO BRACE ALL-WELDED GATE FRAMES. THE CONTRACTOR SHALL BE RESPONSIBLE FOR THE PROPER RIGID CONSTRUCTION OF ALL GATES SUPPLIED.

DOUBLE OPENING SWING GATE (2)

N.T.S.

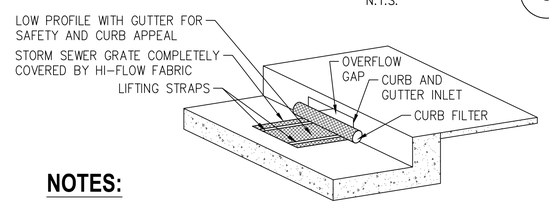

NOTES:

1. DROP INLET SEDIMENT BARRIERS ARE TO BE USED FOR SMALL, NEARLY LEVEL DRAINAGE AREAS. (LESS THAN 5%)
2. EXCAVATE A BASIN OF SUFFICIENT SIZE ADJACENT TO THE DROP INLET.
3. THE TOP OF THE STRUCTURE (PONDING HEIGHT) MUST BE WELL BELOW THE GROUND ELEVATION DOWNSLOPE TO PREVENT RUNOFF FROM BY- PASSING THE INLET. A TEMPORARY DIKE MAY BE NECESSARY ON THE DOWNSLOPE SIDE OF THE STRUCTURE.

CATCH BASIN PROTECTION (5)

N.T.S.

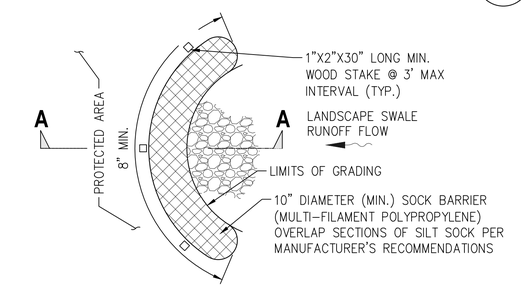

PLAN VIEW

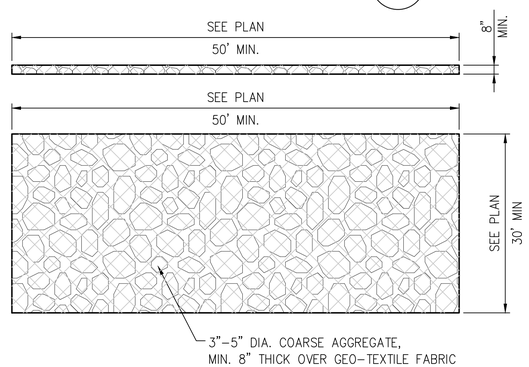

STABILIZED CONSTRUCTION ENTRANCE DETAIL (6)

N.T.S.

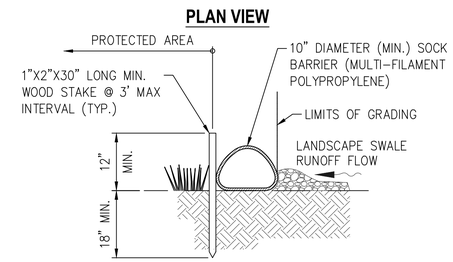

SECTION A-A

NOTES

1. SILT SOCK COMPOST FILL SHALL NOT CONTAIN BIOSOLIDS AND SHOULD BE CONSISTENT WIDTH EPA GUIDELINES.

SILT SOCK BARRIER DETAIL (IN LANDSCAPE SWALE) (3)

N.T.S.

APPROVED BY:

CHIEF, CIVIL ENGINEERING BRANCH, DPP DATE

BOWERS + KUBOTA CONSULTING

Project Management • Planning • Architectural/Engineering Design • Construction Management

LANCE K. TAKEHARA LICENSED PROFESSIONAL ENGINEER No. 14439-C HAWAII, U.S.A.

EXPIRATION DATE 04/30/2018

THIS WORK WAS PREPARED BY ME OR UNDER MY SUPERVISION AND CONSTRUCTION OF THIS PROJECT WILL BE UNDER MY OBSERVATION. ("OBSERVATION OF CONSTRUCTION" SHALL BE DEFINED IN CHAPTER 115, HAWAII ADMINISTRATIVE RULES FOR PROFESSIONAL ENGINEERS, SURVEYORS AND LANDSCAPE ARCHITECTS STATE OF HAWAII, SUBCHAPTER 1, SECTION 16-115-2 DEFINITIONS, EFFECTIVE 8/29/94.)

MALUHIA AUXILIARY PARKING LOT

TMK: 1-6-009:001

DATE	ISSUANCE

NO.	DATE	DESCRIPTION	APRPOVED

BUILDING	NAME			
PROJECT	TMK	1-6-009:001		
	DESCRIPT.	MALUHIA AUXILIARY PARKING LOT		
	NUMBER	12A6506.00		
	DRAWN BY	SD/ET	CHECKED BY	LT
	DATE	APRIL 17, 2017		
DRAWING	TITLE	CONSTRUCTION DETAILS		
	NUMBER	C	5	01
		TYPE	SERIES	SEQUENCE

BOWERS + KUBOTA CONSULTING

Project Management • Planning • Architectural/Engineering Design • Construction Management

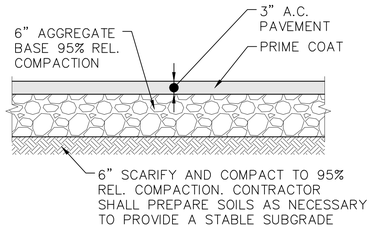

ASPHALT PAVEMENT SECTION (1)

N.T.S.

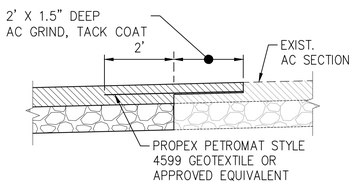

AC PAVEMENT GRIND CONFORM (2)

N.T.S.

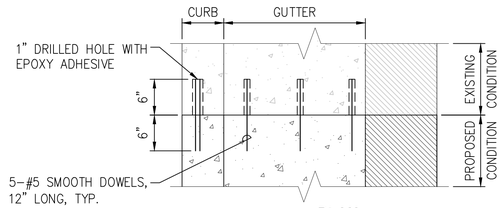

PLAN

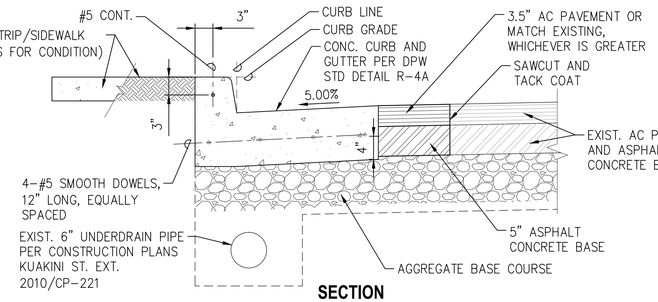

SECTION

RESTORATION OF CURB AND GUTTER (CITY) (3)

N.T.S.

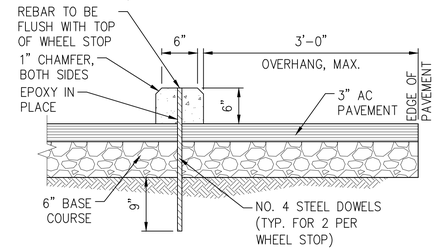

SECTION VIEW

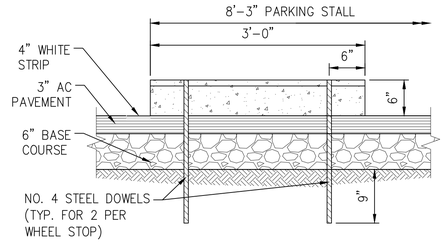

FRONT VIEW

WHEEL STOP DETAIL (8)

N.T.S.

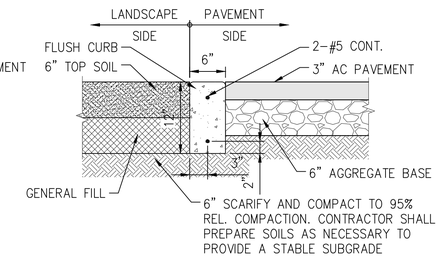

FLUSH CURB DETAIL (9)

N.T.S.

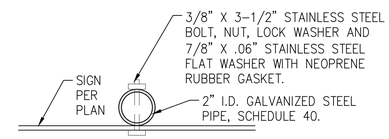

TYPICAL MOUNTING DETAIL

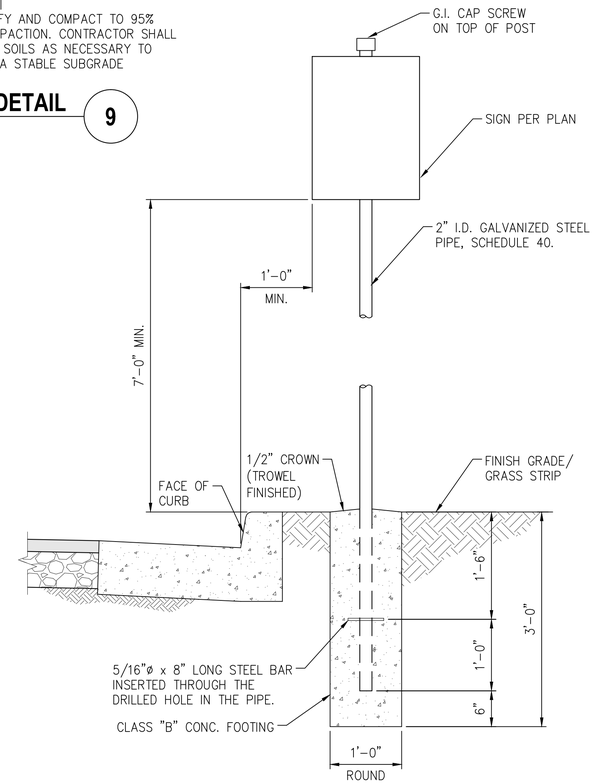

SIGN POST DETAIL (7)

N.T.S.

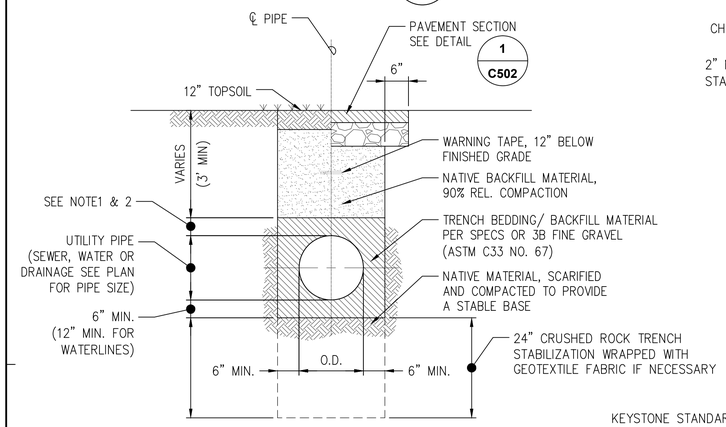

NOTES

1. 12" OF CUSHION MATERIAL FOR PIPES 16" OR LARGER. 6" CUSION MATERIAL FOR PIPES 12" OR SMALLER AT LOCATIONS WHERE INVERT IS ABOVE 4-FOOT ELEVATION.
2. 12" OF CUSHION MATERIAL FOR ALL PIPES SIZES AT LOCATIONS WHERE THE INVERT IS AT OR BELOW THE 4-FOOT ELEVATION
3. ALL DISTURBED PAVEMENT MARKINGS SHALL BE REPLACED AND ALL REQUIRED UTILITY ADJUSTMENTS SUCH AS MANHOLE COVERS ETC. SHALL BE DONE BY THE CONTRACTOR.
4. THE CONTRACTOR SHALL COMPLY TO CITY AND COUNTY MEMO NO. CEB-1-08, DATED FEBRUARY 15, 2008 AND MEMO NO. CEB-1-09, DATED APRIL 06, 2009
5. THE CONTRACTOR SHALL COORDINATE WORK WITH ALL UTILITY AGENCIES KNOWN TO EXIST IN THE AREA OF THE PROJECT SITE AND ALSO DEPT. OF FACILITY MAINTENANCE.

TRENCH DETAIL (4)

N.T.S.

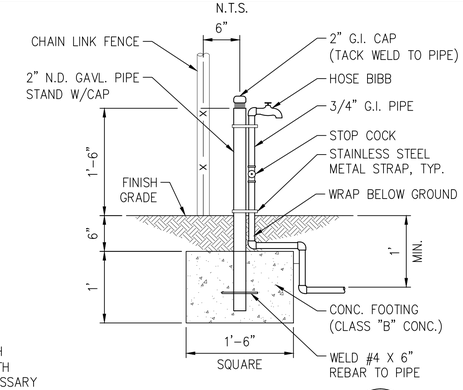

HOSE BIBB DETAIL (5)

N.T.S.

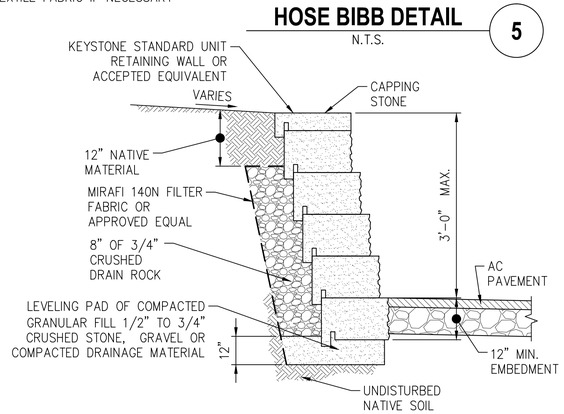

KEYSTONE WALL DETAIL (6)

N.T.S.

APPROVED BY:

CHIEF, CIVIL ENGINEERING BRANCH, DPP DATE

BOWERS + KUBOTA CONSULTING

Project Management • Planning • Architectural/Engineering Design • Construction Management

LANCE K. TAKEHARA
LICENSED PROFESSIONAL ENGINEER
No. 14439-C
HAWAII, U.S.A.

EXPIRATION DATE 04/30/2018

THIS WORK WAS PREPARED BY ME OR UNDER MY SUPERVISION AND CONSTRUCTION OF THIS PROJECT WILL BE UNDER MY OBSERVATION. ("OBSERVATION OF CONSTRUCTION" SHALL BE DEFINED IN CHAPTER 115, HAWAII ADMINISTRATIVE RULES FOR PROFESSIONAL ENGINEERS, SURVEYORS AND LANDSCAPE ARCHITECTS STATE OF HAWAII, SUBCHAPTER 1, SECTION 16-115-2 DEFINITIONS, EFFECTIVE 8/29/94.)

MALUHIA AUXILIARY PARKING LOT

TMK:1-6-009:001

DATE	ISSUANCE

NO.	DATE	DESCRIPTION	APRPOVED

BUILDING	NAME		
PROJECT	TMK	1-6-009:001	
	DESCRIPT.	MALUHIA AUXILIARY PARKING LOT	
	NUMBER	12A6506.00	
	DRAWN BY	SD/ET	CHECKED BY LT
	DATE	APRIL 17, 2017	
DRAWING	TITLE	CONSTRUCTION DETAILS	
	NUMBER	C	5 02
		TYPE	SERIES SEQUENCE

BOWERS + KUBOTA CONSULTING

• Project Management • Planning • Architectural/Engineering Design • Construction Mangement

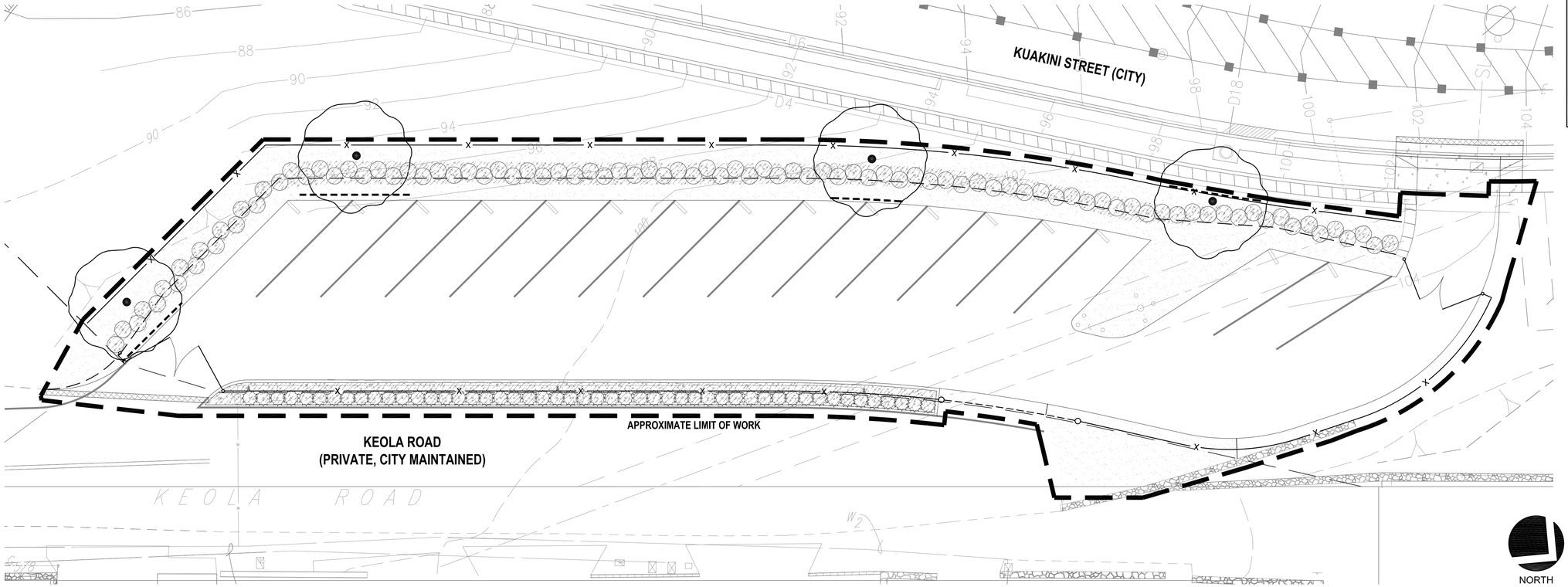

LANDSCAPE PLAN

SCALE: 1" = 10'

PLANT SCHEDULE

TREES	QTY	COMMON NAME	BOTANICAL NAME	SIZE	CAL	HT
	4	PINK TRUMPET TREE	TABEBUIA IMPETIGINOSA	25 GAL	2"CAL	8-10' HT

SHRUBS	QTY	COMMON NAME	BOTANICAL NAME	SIZE	HT	SPD
	92	KOKI'O 'ULA	HIBISCUS KOKIO SAINTJOHNIANUS	5 GAL	42" HT., BRANCHING	
	50	PARSLEY PANAX	POLYSCIAS FRUTICOSA	3 GAL	24"	

SOD/SEED	QTY	COMMON NAME	BOTANICAL NAME	CONT
	2,272 SF	BERMUDA GRASS	CYNODON DACTYLON	SEED W/ HYDROMULCH

MISCELLANEOUS	QTY	DESCRIPTION	NOTES
	2,272 SF	ORGANIC SOIL CONDITIONER	2" DEPTH
	42 CY	IMPORTED SCREENED SOIL	6" DEPTH, DISTRIBUTED BY HAWAIIAN EARTH PRODUCTS, (808) 261-5877, WWW.MENEHUNEMAGICHAWAII.COM
	4 CY	DECO MULCH	2" DEPTH
----	60 LF	ROOT BARRIER	

PLANTING NOTES:

1. CONTRACTOR SHALL BE HELD RESPONSIBLE FOR ALL MATERIALS, SCHEDULING, PRODUCTS, WARRANTIES AND METHODS FOR EXECUTION OF WORK.
2. PROVIDE A 2" LAYER OF ORGANIC SOIL CONDITIONER OVER ALL PLANTING AREAS.
3. BACKFILL MIX SHALL CONSIST OF THREE (3) PARTS OF AMENDED IMPORTED PLANTING SOIL TO ONE (1) PART ORGANIC SOIL CONDITIONER (SEE SPECIFICATIONS). ADD ONE (1) POUND OF 10-30-10 FERTILIZER TO ONE (1) CUBIC YARD OF BACKFILL MIX. MIX THOROUGHLY ON PROJECT SITE PRIOR TO ANY PLANTING OPERATIONS.
4. PLANTING TABLETS FOR TREES AND SHRUBS SHALL BE AS FOLLOWS:

   A) FIELD SPECIMEN 12 TABLETS
   B) 25 GALLON 8 TABLETS
   C) 5 GALLON 3 TABLETS

   USE SLOW RELEASE FERTILIZER TABLETS 20-10-5, 21 GRAM SIZE.

BOWERS + KUBOTA CONSULTING
Project Management • Planning • Architectural/Engineering Design • Construction Management

JOEL N. KUROKAWA
LICENSED PROFESSIONAL LANDSCAPE ARCHITECT
No. 10659
HAWAII, U.S.A.

EXPIRATION DATE 04/30/2018

THIS WORK WAS PREPARED BY ME OR UNDER MY SUPERVISION AND CONSTRUCTION OF THIS PROJECT WILL BE UNDER MY OBSERVATION. ("OBSERVATION OF CONSTRUCTION" SHALL BE DEFINED IN CHAPTER 115, HAWAII ADMINISTRATIVE RULES FOR PROFESSIONAL ENGINEERS, SURVEYORS AND LANDSCAPE ARCHITECTS STATE OF HAWAII, SUBCHAPTER 1, SECTION 16-115-2 DEFINITIONS, EFFECTIVE 8/29/94.)

MALUHIA AUXILIARY PARKING LOT

TMK:1-6-009:001

DATE	ISSUANCE

NO.	DATE	DESCRIPTION	APRPOVED

BUILDING	NAME			
	TMK	1-6-009:001		
PROJECT	DESCRIPT.	MALUHIA AUXILIARY PARKING LOT		
	NUMBER	12A6506.00		
	DRAWN BY	VA	CHECKED BY	JK
	DATE	4/7/17		
DRAWING	TITLE	LANDSCAPE PLAN, PLANT LIST AND NOTES		
	NUMBER	L	1	01
		TYPE	SERIES	SEQUENCE

BOWERS + KUBOTA CONSULTING
• Project Management • Planning • Architectural/Engineering Design • Construction Mangement

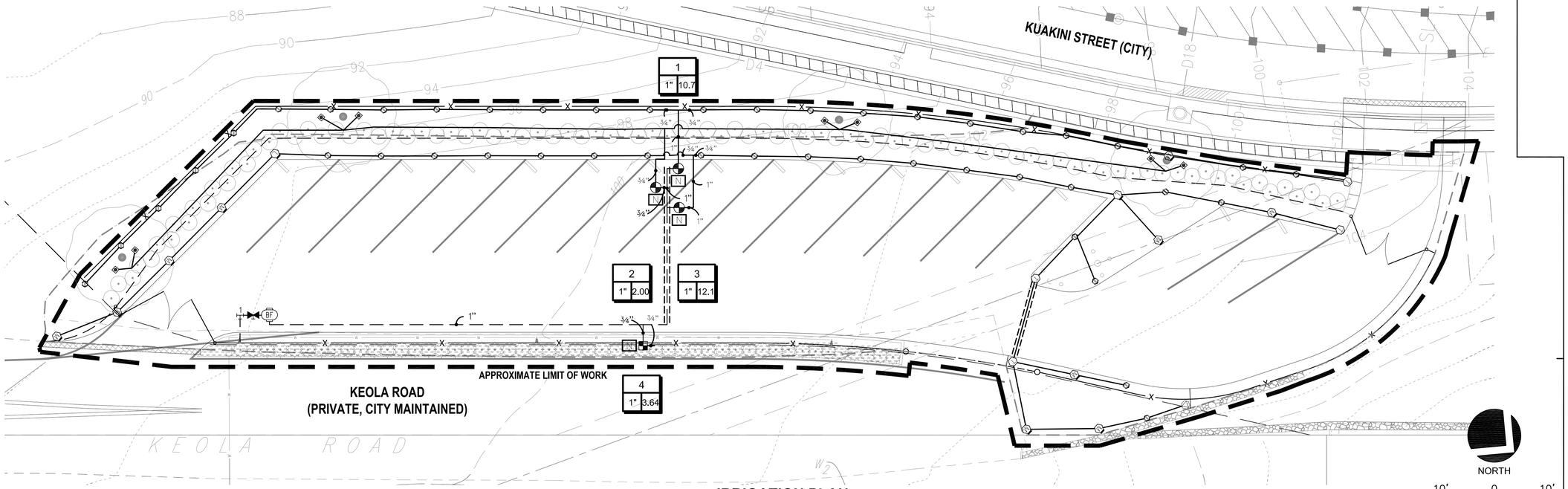

IRRIGATION PLAN

SCALE: 1" = 10'

IRRIGATION SCHEDULE

SYMBOL	MANUFACTURER/MODEL/DESCRIPTION	ARC	PSI	GPM	RADIUS
	HUNTER MP1000 PROS-04-PRS40-CV TURF ROTATOR, 4" (10.16 CM) POP-UP WITH CHECK VALVE, PRESSURE REGULATED TO 40 PSI (2.76 BAR), MP ROTATOR NOZZLE ON PRS40 BODY. M=MAROON ADJ ARC 90 TO 210, L=LIGHT BLUE 210 TO 270 ARC, O=OLIVE 360 ARC.	210-270	40		14'
	HUNTER MP1000 PROS-04-PRS40-CV TURF ROTATOR, 4" (10.16 CM) POP-UP WITH CHECK VALVE, PRESSURE REGULATED TO 40 PSI (2.76 BAR), MP ROTATOR NOZZLE ON PRS40 BODY. M=MAROON ADJ ARC 90 TO 210, L=LIGHT BLUE 210 TO 270 ARC, O=OLIVE 360 ARC.	90-210	40		14'
	HUNTER MP800SR PROS-04-PRS40-CV TURF ROTATOR, 4.0" POP-UP WITH CHECK VALVE, PRESSURE REGULATED TO 40 PSI (2.76 BAR), MP ROTATOR NOZZLE ON PRS40 BODY. ADJ=ORANGE AND GRAY (ARC 90-210), 360=LIME GREEN AND GRAY (ARC 360)	360	40	0.78	10'
	HUNTER MP800SR PROS-04-PRS40-CV TURF ROTATOR, 4.0" POP-UP WITH CHECK VALVE, PRESSURE REGULATED TO 40 PSI (2.76 BAR), MP ROTATOR NOZZLE ON PRS40 BODY. ADJ=ORANGE AND GRAY (ARC 90-210), 360=LIME GREEN AND GRAY (ARC 360)	ADJ	40		10'
	HUNTER MP CORNER PROS-04-PRS40-CV TURF ROTATOR, 4" (10.16CM) POP-UP WITH FACTORY INSTALLED CHECK VALVE, PRESSURE REGULATED TO 40 PSI (2.76 BAR), MP ROTATOR NOZZLE. T=TURQUOISE ADJ ARC 45-105 ON PRS40 BODY.	ADJ	40		13'
	HUNTER MP STRIP PROS-04-PRS40-CV TURF ROTATOR, 4" (10.16 CM) POP-UP WITH FACTORY INSTALLED CHECK VALVE, PRESSURE REGULATED TO 40 PSI (2.76 BAR), MP ROTATOR NOZZLE ON PRS40 BODY. LST=IVORY LEFT STRIP, SST=BROWN SIDE STRIP, RST=COPPER RIGHT STRIP.	SST	40	0.44	5'x30'

SYMBOL	MANUFACTURER/MODEL/DESCRIPTION	ARC	PSI	GPM	RADIUS
	HUNTER RZWS-SLEEVE-36-25CV 36" LONG RZWS WITH FILTER FABRIC SLEEVE, 0.25 GPM BUBBLER, CHECK VALVE, 1/2" SWING JOINT FOR CONNECTION TO 1/2" PIPE	360	30	0.25	1'

SYMBOL	MANUFACTURER/MODEL/DESCRIPTION
	HUNTER ICZ-101-25 DRIP CONTROL ZONE KIT. 1" ICV GLOBE VALVE WITH 1" HY100 FILTER SYSTEM. PRESSURE REGULATION: 25PSI. FLOW RANGE: 2 GPM TO 20 GPM. 150 MESH STAINLESS STEEL SCREEN.
	AREA TO RECEIVE DRIPLINE RAIN BIRD XFD-04-12 (09) XFD ON-SURFACE PRESSURE COMPENSATING LANDSCAPE DRIPLINE. 0.4GPH EMITTERS AT 9.0" O.C. DRIPLINE LATERALS SPACED AT 9.0" APART, WITH EMITTERS OFFSET FOR TRIANGULAR PATTERN. UV RESISTANT. SPECIFY XF INSERT FITTINGS.

SYMBOL	MANUFACTURER/MODEL/DESCRIPTION
	HUNTER ICV-G-FS 1", 1-1/2", 2", AND 3" PLASTIC ELECTRIC REMOTE CONTROL VALVES, GLOBE CONFIGURATION, WITH NPT THREADED INLET/OUTLET, FOR COMMERCIAL/MUNICIPAL USE. WITH FILTER SENTRY.
	NIBCO T-113 CLASS 125 BRONZE GATE SHUT OFF VALVE WITH WHEEL HANDLE, SAME SIZE AS PIPE DIAMETER, SIZE RANGE - 1/4" - 3"
BF	FEBCO 825Y 1" REDUCED PRESSURE BACKFLOW PREVENTER
N	HUNTER NODE-100 (2) SINGLE STATION CONTROLLER, OUTDOOR, BATTERY POWERED. DC LATCHING SOLENOID INCLUDED.

SYMBOL	MANUFACTURER/MODEL/DESCRIPTION	ARC	PSI	GPM	RADIUS
	POINT OF CONNECTION 1-1/2"				
	IRRIGATION LATERAL LINE: PVC SCHEDULE 40				
	IRRIGATION MAINLINE: HDPE PE4710 DR 11 (200PSI)				
	PIPE SLEEVE: PVC SCHEDULE 40 TYPICAL PIPE SLEEVE FOR IRRIGATION PIPE. PIPE SLEEVE SIZE SHALL ALLOW FOR IRRIGATION PIPING AND THEIR RELATED COUPLINGS TO EASILY SLIDE THROUGH SLEEVING MATERIAL. EXTEND SLEEVES 18 INCHES BEYOND EDGES OF PAVING OR CONSTRUCTION.				

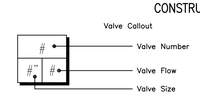

IRRIGATION NOTES:

1. IRRIGATION SYSTEMS SHOWN ON THE DRAWINGS ARE DIAGRAMMATIC AND ARE SUBJECT TO ADJUSTMENTS DUE TO UNANTICIPATED FIELD CONDITIONS. UNLESS OTHERWISE NOTED, LOCATE ALL EQUIPMENT WITHIN PLANTING AREAS.
2. THE IRRIGATION SYSTEM DESIGN IS BASED ON A MINIMUM STATIC WATER PRESSURE OF 100 PSI AT THE POINT OF CONNECTION.
3. CONTRACTOR IS RESPONSIBLE FOR THE COORDINATION OF THE LATERALS UNDER PAVEMENT AND THROUGH WALLS AND SHALL ASSURE THAT THESE ITEMS ARE LAID PRIOR TO THE PLACEMENT OF PAVEMENT AND WALLS.
4. INSTALL ALL IRRIGATION WIRES IN HDPE PIPE BENEATH THE PAVING AND IN PLANTING AREAS. VERIFY UTILITY LOCATIONS BEFORE TRENCHING. CONTRACTOR WILL BE RESPONSIBLE FOR ANY DAMAGE TO UTILITIES.
5. THE CONTRACTOR, TOGETHER WITH THE OWNER'S REPRESENTATIVE SHALL PROGRAM THE IRRIGATION CONTROLLER TO ACCOMMODATE THE LANDSCAPE AND SITE REQUIREMENTS, AND SHALL INSTRUCT THE OWNER'S REPRESENTATIVE ON THE OPERATION OF THE COMPLETE SYSTEM.
6. IRRIGATION SYSTEM SHALL BE OPERATED DURING NON-PEAK HOURS.

BOWERS + KUBOTA CONSULTING
Project Management • Planning • Architectural/Engineering Design • Construction Management

JOEL N. KUROKAWA
LICENSED PROFESSIONAL LANDSCAPE ARCHITECT
No. 10659
HAWAII, U.S.A.

EXPIRATION DATE 04/30/2018

THIS WORK WAS PREPARED BY ME OR UNDER MY SUPERVISION AND CONSTRUCTION OF THIS PROJECT WILL BE UNDER MY OBSERVATION. ("OBSERVATION OF CONSTRUCTION" SHALL BE DEFINED IN CHAPTER 115, HAWAII ADMINISTRATIVE RULES FOR PROFESSIONAL ENGINEERS, SURVEYORS AND LANDSCAPE ARCHITECTS STATE OF HAWAII, SUBCHAPTER 1, SECTION 16-115-2 DEFINITIONS, EFFECTIVE 8/29/94.)

MALUHIA AUXILIARY PARKING LOT

TMK:1-6-009:001

DATE	ISSUANCE

NO.	DATE	DESCRIPTION	APRPOVED

BUILDING	NAME			
PROJECT	TMK	1-6-009:001		
	DESCRIPT.	MALUHIA AUXILIARY PARKING LOT		
	NUMBER	12A6506.00		
	DRAWN BY	VA	CHECKED BY	JK
	DATE	4/7/17		
DRAWING	TITLE	IRRIGATION PLAN, EQUIPMENT SCHEDULE AND NOTES		
	NUMBER	L	2	01
		TYPE	SERIES	SEQUENCE

BOWERS + KUBOTA CONSULTING
• Project Management • Planning • Architectural/Engineering Design • Construction Mangement

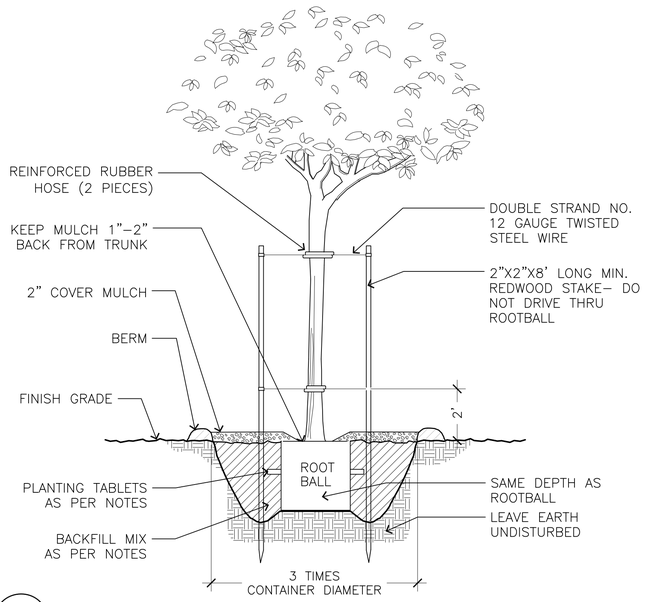

1 TREE PLANTING AND STAKING DETAIL

NOT TO SCALE

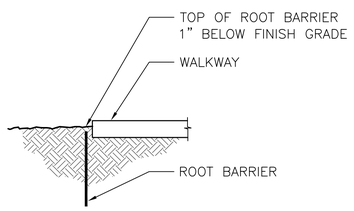

NOTE:
INSTALL PER MANUFACTURER'S INSTRUCTIONS.

2 ROOT BARRIER DETAIL

NOT TO SCALE

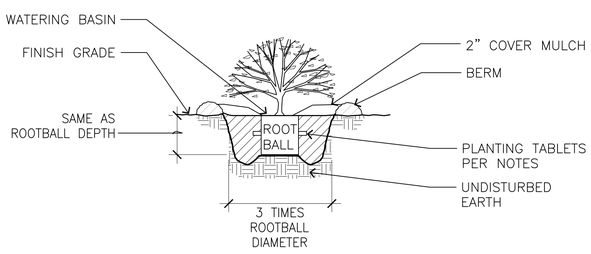

3 SHRUB PLANTING DETAIL

NOT TO SCALE

BOWERS + KUBOTA CONSULTING

Project Management • Planning • Architectural/Engineering Design • Construction Management

JOEL N. KUROKAWA
LICENSED PROFESSIONAL LANDSCAPE ARCHITECT
No. 10659
HAWAII, U.S.A.

EXPIRATION DATE 04/30/2018

THIS WORK WAS PREPARED BY ME OR UNDER MY SUPERVISION AND CONSTRUCTION OF THIS PROJECT WILL BE UNDER MY OBSERVATION. ("OBSERVATION OF CONSTRUCTION" SHALL BE DEFINED IN CHAPTER 115, HAWAII ADMINISTRATIVE RULES FOR PROFESSIONAL ENGINEERS, SURVEYORS AND LANDSCAPE ARCHITECTS STATE OF HAWAII, SUBCHAPTER 1, SECTION 16–115–2 DEFINITIONS, EFFECTIVE 8/29/94.)

MALUHIA AUXILIARY PARKING LOT

TMK:1–6–009:001

DATE	ISSUANCE

NO.	DATE	DESCRIPTION	APRPOVED

BUILDING	NAME			
	TMK	1–6–009:001		
PROJECT	DESCRIPT.	MALUHIA AUXILIARY PARKING LOT		
	NUMBER	12A6506.00		
	DRAWN BY	VA	CHECKED BY	JK
	DATE	4/7/17		
DRAWING	TITLE	LANDSCAPE DETAILS		
	NUMBER	L	3	01
		TYPE	SERIES	SEQUENCE

BOWERS + KUBOTA CONSULTING

• Project Management • Planning • Architectural/Engineering Design • Construction Mangement

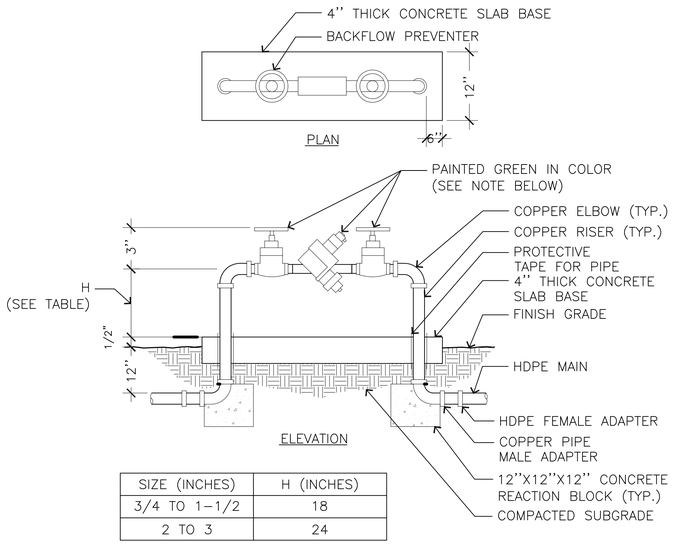

SIZE (INCHES)	H (INCHES)
3/4 TO 1-1/2	18
2 TO 3	24

NOTE: ALL EXPOSED SURFACES TO BE PAINTED GREEN. MFR: AMERITONE NO. 1D26C, 'CRUISER GREEN'

1 BACKFLOW PREVENTER DETAIL
NOT TO SCALE

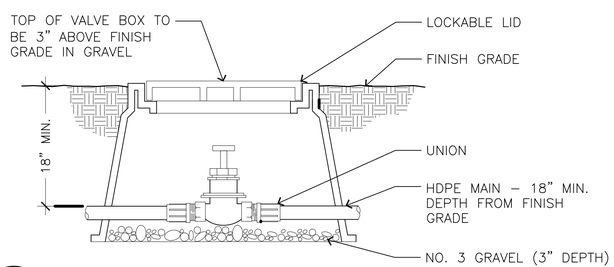

2 GATE VALVE DETAIL
NOT TO SCALE

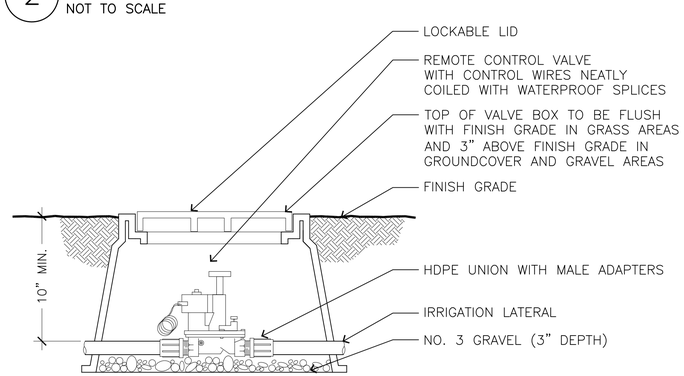

3 REMOTE CONTROL VALVE DETAIL
NOT TO SCALE

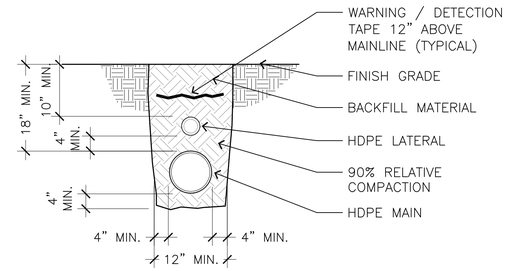

SECTION FOR: HDPE MAIN AND HDPE LATERAL

NOTES:
1. NO ROCKS OVER ½" SHALL BE WITHIN 2" OF PIPE.
2. ALL EXCAVATIONS SHALL BE BACKFILLED WITH TRENCH BACKFILL MATERIAL PER SPECIFICATIONS, AND PER AMENDMENT TO SPECIFICATIONS.
3. TRENCHES MUST BE LEFT FLUSH WITH, OR SLIGHTLY ABOVE, ADJACENT FINISHED GRADE AFTER COMPACTING TO 90% RELATIVE COMPACTION.

4 TRENCH DETAIL @ PLANTER
NOT TO SCALE

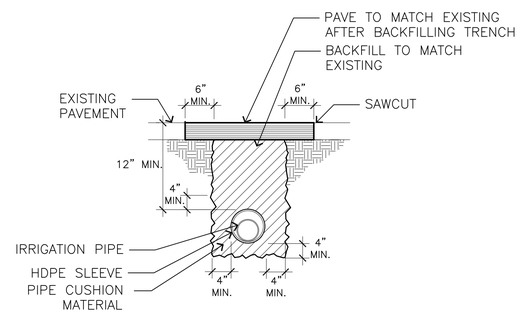

5 CONDUIT/SLEEVE DETAIL IN PAVEMENT
NOT TO SCALE

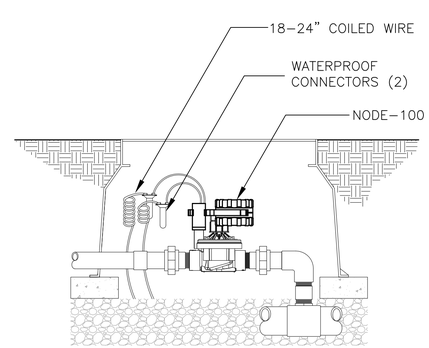

6 NODE CONTROLLER DETAIL
NOT TO SCALE

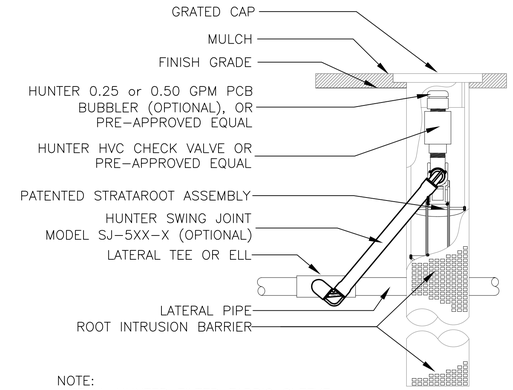

NOTE:
INSTALL HUNTER FILTER FABRIC SLEEVE-
#RZWS-SLEEVE

7 18" ROOT WATERING SYSTEM DETAIL
NOT TO SCALE

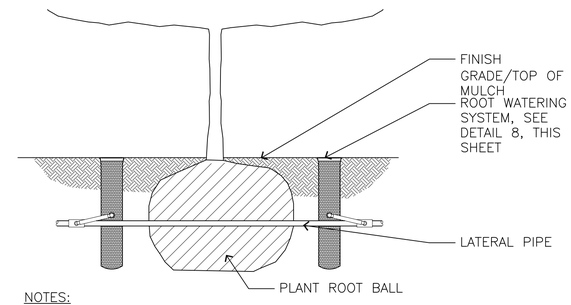

NOTES:
1. POSITION 2 UNITS EVENLY SPACED AROUND PLANT. FOR NEW TREES PLACE NEAR ROOT BALL. REFER TO IRRIGATION PLAN.
2. INSTALL PRODUCT WITH TOP EVEN WITH FINISH GRADE OR THE TOP OF MULCH.
3. WHEN INSTALLING IN EXTREMELY HARD OR CLAY SOILS, ADD ¾" GRAVEL UNDER AND AROUND THE UNIT TO ALLOW FASTER WATER INFILTRATION AND ROOT PENETRATION.
4. ONCE RWS HAS BEEN INSTALLED FILL THE BASKET WITH PEA GRAVEL BEFORE LOCKING LID.

8 ROOT WATERING SYSTEM INSTALLATION DETAIL
NOT TO SCALE

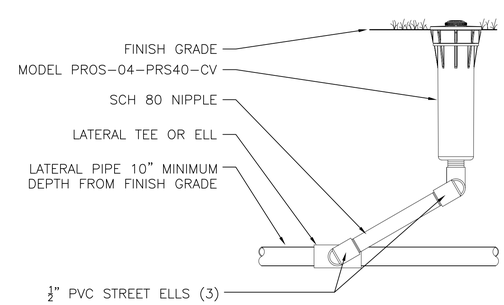

9 4" MP ROTATOR DETAIL
NOT TO SCALE

BOWERS + KUBOTA CONSULTING
Project Management • Planning • Architectural/Engineering Design • Construction Management

JOEL N. KUROKAWA
LICENSED PROFESSIONAL LANDSCAPE ARCHITECT
No. 10659
HAWAII, U.S.A.

EXPIRATION DATE 04/30/2018

THIS WORK WAS PREPARED BY ME OR UNDER MY SUPERVISION AND CONSTRUCTION OF THIS PROJECT WILL BE UNDER MY OBSERVATION. ("OBSERVATION OF CONSTRUCTION" SHALL BE DEFINED IN CHAPTER 115, HAWAII ADMINISTRATIVE RULES FOR PROFESSIONAL ENGINEERS, SURVEYORS AND LANDSCAPE ARCHITECTS STATE OF HAWAII, SUBCHAPTER 1, SECTION 16-115-2 DEFINITIONS, EFFECTIVE 8/29/94.)

MALUHIA AUXILIARY PARKING LOT

TMK:1-6-009:001

DATE	ISSUANCE

NO.	DATE	DESCRIPTION	APRPOVED

BUILDING	NAME			
	TMK	1-6-009:001		
PROJECT	DESCRIPT.	MALUHIA AUXILIARY PARKING LOT		
	NUMBER	12A6506.00		
	DRAWN BY	VA	CHECKED BY	JK
	DATE	4/7/17		
DRAWING	TITLE	IRRIGATION DETAILS		
	NUMBER	L	4	01
		TYPE	SERIES	SEQUENCE

BOWERS + KUBOTA CONSULTING
Project Management • Planning • Architectural/Engineering Design • Construction Management

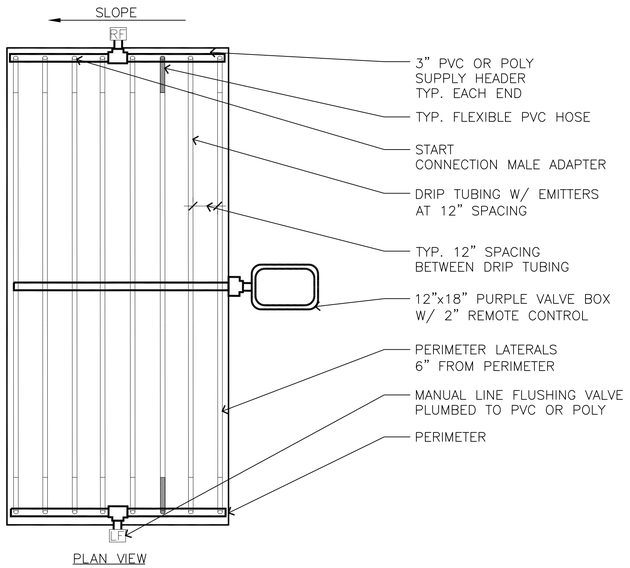

1 DRIP IRRIGATION LAYOUT

NOT TO SCALE

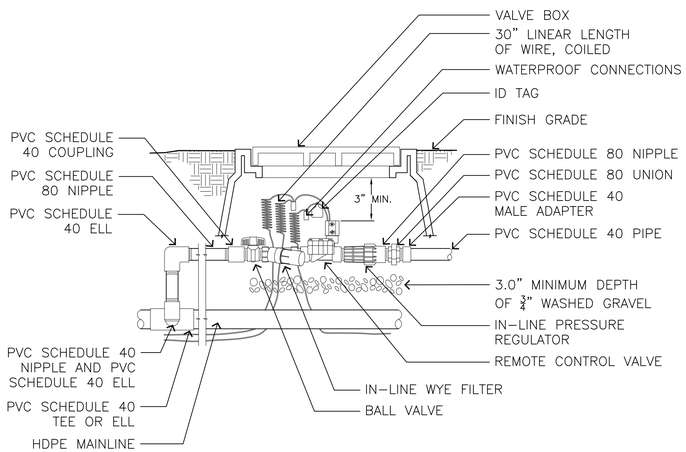

2 CONTROL ZONE KIT FOR DRIP SYSTEM

NOT TO SCALE

BOWERS + KUBOTA CONSULTING

Project Management • Planning • Architectural/Engineering Design • Construction Management

JOEL N. KUROKAWA
LICENSED PROFESSIONAL LANDSCAPE ARCHITECT
No. 10659
HAWAII, U.S.A.

EXPIRATION DATE 04/30/2018

THIS WORK WAS PREPARED BY ME OR UNDER MY SUPERVISION AND CONSTRUCTION OF THIS PROJECT WILL BE UNDER MY OBSERVATION. ("OBSERVATION OF CONSTRUCTION" SHALL BE DEFINED IN CHAPTER 115, HAWAII ADMINISTRATIVE RULES FOR PROFESSIONAL ENGINEERS, SURVEYORS AND LANDSCAPE ARCHITECTS STATE OF HAWAII, SUBCHAPTER 1, SECTION 16-115-2 DEFINITIONS, EFFECTIVE 8/29/94.)

MALUHIA AUXILIARY PARKING LOT

TMK: 1-6-009: 001

DATE	ISSUANCE

NO.	DATE	DESCRIPTION	APRPOVED

BUILDING	NAME			
	TMK	1-6-009: 001		
PROJECT	DESCRIPT.	MALUHIA AUXILIARY PARKING LOT		
	NUMBER	12A6506.00		
	DRAWN BY	VA	CHECKED BY	JK
	DATE	4/7/17		
DRAWING	TITLE	**IRRIGATION DETAILS**		
	NUMBER	**L**	**5**	**01**
		TYPE	SERIES	SEQUENCE

BOWERS + KUBOTA CONSULTING

• Project Management • Planning • Architectural/Engineering Design • Construction Mangement